Code
9828093026 01
Edition
01/11/2015

(cULus)
(cCSAus)

SPARES PARTS LIST

With service kit

Hp 35 - 40 - 50
kW 26 - 30 - 37

INDUSTRIAL COMPRESSORS

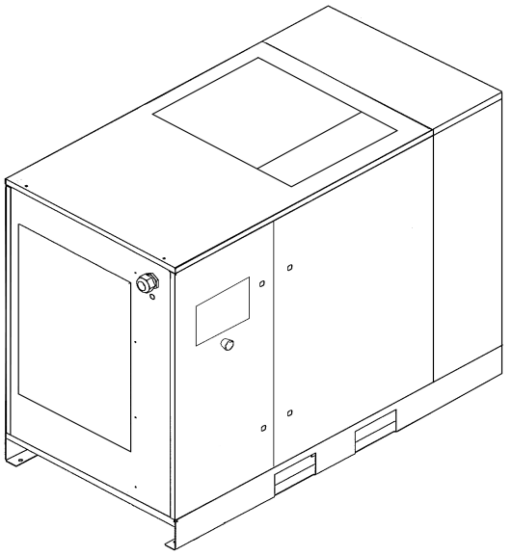

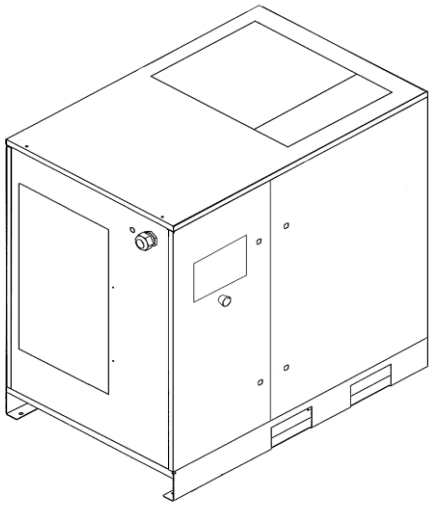

ORIGINAL PART

N° TAV. *DWG.* *NR.* N° TABLE Nr. GRUPPENSATZ N. TAB.	***INDICE - INDEX - TABLE DES MATIERES - INHALTSVERZEICHNIS - INDICE***				
	DESCRIZIONE	***DESCRIPTION***	**DÉSIGNATION**	***BESCHREIBUNG***	**DESIGNACIÓN**
1	BLOCCO MOTO-COMPRESSORE (VELOCITÁ FISSA)	*MOTOR-COMPRESSOR UNIT (FIXED SPEED)*	ENSEMBLE MOTO-COMPRESSEUR (VITESSE FIXE)	*MOTORVERDICHTEREINHEIT (DREHRICHTUNG FESTE DREHZAHL)*	CONJUNTO MOTO-COMPRESOR (VELOCIDAD FIJA)
2	BLOCCO MOTO-COMPRESSORE (VELOCITÁ VARIABILE)	*MOTOR-COMPRESSOR UNIT (VSD)*	ENSEMBLE MOTO-COMPRESSEUR (VITESSE VARIABLE)	*MOTORVERDICHTEREINHEIT (DREHRICHTUNG VARIABLE GESCHWIDIGKEITS)*	CONJUNTO MOTO-COMPRESOR (VELOCIDAD VARIABLE)
3	REGOLATORE ASPIRAZIONE ARIA, VENTILATORE (Hp 35-40-50 / kW 26-30-37)	*UNLOADER VALVE, FAN (Hp 35-40-50 / kW 26-30-37)*	RÉGULATEUR D'ASPIRATION AIR, VENTILATEUR (Hp 35-40-50 / kW 26-30-37)	*SAUGGEHÄUSE, VENTILAT. (Hp 35-40-50 / kW 26-30-37)*	CAJA DE ASPIRACIÓN, VENTILADOR (Hp 35-40-50 / kW 26-30-37)
4	REGOLATORE ASPIR. ARIA (Hp 35-40-50 / kW26-30-37)	*UNLOADER VALVE (Hp 35-40-50 / kW26-30-37)*	RÉGULATEUR D'ASPIRAT. AIR (Hp 35-40-50 / kW26-30-37)	*SAUGGEHÄUSE (Hp 35-40-50 / kW26-30-37)*	CAJA DE ASPIRACIÓN (Hp 35-40-50 / kW26-30-37)
5	SERBATOIO - SEPARATORE ARIA/OLIO / RAFFREDDATORE ARIA - OLIO (Hp 35 / kW26)	*RECEIVER ASSEMBLY / COOLER, AIR AND OIL CIRCUIT (Hp 35 / kW26)*	RÉSERVOIR DE SÉPARATION AIR-HUILE / REFROIDISSEUR, CIRCUIT AIR ET HUILE (Hp 35 / kW26)	*ÖLBEHÄLTER / KÜHLUNG, LUFT- UND ÖLKREISLAUF (Hp 35 / kW26)*	DEPÓSITO DE SEPARACIÓN AIRE-ACEITE / ENFRIADOR, CIRCUITO DE AIRE Y ACEITE (Hp 35 / kW26)
6	SERBATOIO - SEPARATORE ARIA/OLIO / RAFFREDDATORE ARIA - OLIO (Hp 40-50 / kW30-37)	*RECEIVER ASSEMBLY / COOLER, AIR AND OIL CIRCUIT (Hp 40-50 / kW30-37)*	RÉSERVOIR DE SÉPARATION AIR-HUILE / REFROIDISSEUR, CIRCUIT AIR ET HUILE (Hp 40-50 / kW30-37)	*ÖLBEHÄLTER / KÜHLUNG, LUFT- UND ÖLKREISLAUF (Hp 40-50 / kW30-37)*	DEPÓSITO DE SEPARACIÓN AIRE-ACEITE / ENFRIADOR, CIRCUITO DE AIRE Y ACEITE (Hp 40-50 / kW30-37)
7	ESSICCATORE DELL'ARIA / FILTRO SEPARATORE (Hp 35 / kW26)	*AIR DRYER / FILTER SEPARATOR (Hp 35 / kW26)*	SÉCHEUR / FILTRE SEPARATEUR (Hp 35 / kW26)	*TROCKNER / KONDENSATABSCHEIDER FILTER (Hp 35 / kW26)*	SECADOR / FILTRO DE SEPARACIÓN (Hp 35 / kW26)
8	ESSICCATORE DELL'ARIA / FILTRO SEPARATORE (Hp 40-50 / kW30-37)	*AIR DRYER / FILTER SEPARATOR (Hp 40-50 / kW30-37)*	SÉCHEUR / FILTRE SEPARATEUR (Hp 40-50 / kW30-37)	*TROCKNER / KONDENSATABSCHEIDER FILTER (Hp 40-50 / kW30-37)*	SECADOR / FILTRO DE SEPARACIÓN (Hp 40-50 / kW30-37)
9	CARENATURA - PANNELLI FONO ASSORBENTI (Hp 35 / kW26)	*BODYWORK ASSEMBLY (Hp 35 / kW26)*	CAPOTAGE-PANNEAUX INSONORISANTS (Hp 35 / kW26)	*VERKLEIDUNG (Hp 35 / kW26)*	CARENADO-PANELES FONOABSORBENTES (Hp 35 / kW26)
10	CARENATURA - PANNELLI FONO ASSORBENTI (Hp 40-50 / kW30-37)	*BODYWORK ASSEMBLY (Hp 40-50 / kW30-37)*	CAPOTAGE-PANNEAUX INSONORISANTS (Hp 40-50 / kW30-37)	*VERKLEIDUNG (Hp 40-50 / kW30-37)*	CARENADO-PANELES FONOABSORBENTES (Hp 40-50 / kW30-37)
11	CARENATURA - PANNELLI FONO ASSORBENTI CON ESSICCATORE (Hp 40-50 / kW30-37)	*BODYWORK ASSEMBLY WITH DRYER (Hp 40-50 / kW30-37)*	CAPOTAGE-PANNEAUX INSONORISANTS AVEC SÉCHEUR (Hp 40-50 / kW30-37)	*VERKLEIDUNG MIT TROKNER (Hp 40-50 / kW30-37)*	CARENADO-PANELES FONOABSORBENTES CON SECADORA (Hp 40-50 / kW30-37)
12	PANNELLO COMANDI E QUADRO ELETTRICO Hp 35-40 / kW26-30 (VELOCITÁ FISSA)	*ELECTRICAL CUBICLE Hp 35-40 / kW26-30 (FIXED SPEED)*	PLATINE ELECTRIQUE Hp 35-40 / kW26-30 (VITESSE FIXE)	*ELEKTRISCHE KASTEN Hp 35-40 / kW26-30 (DREHRICHTUNG FESTE DREHZAHL)*	CUBÍCULO ELECTRICO Hp 35-40 / kW26-30 (VELOCIDAD FIJA)
13	PANNELLO COMANDI E QUADRO ELETTRICO Hp 50 / kW37 (VELOCITÁ FISSA)	*ELECTRICAL CUBICLE Hp 50 / kW37 (FIXED SPEED)*	PLATINE ELECTRIQUE Hp 50 / kW37 (VITESSE FIXE)	*ELEKTRISCHE KASTEN Hp 50 / kW37 (DREHRICHTUNG FESTE DREHZAHL)*	CUBÍCULO ELECTRICO Hp 50 / kW37 (VELOCIDAD FIJA)
14	PANNELLO COMANDI E QUADRO ELETTRICO Hp 35-40-50 / kW26-30-37 (VELOCITÁ VARIABILE)	*ELECTRICAL CUBICLE Hp 35-40-50 / kW26-30-37 (VSD)*	PLATINE ELECTRIQUE Hp 35-40-50 / kW26-30-37 (VITESSE VARIABLE)	*ELEKTRISCHE KASTEN Hp 35-40-50 / kW26-30-37 (DREHRICHTUNG VARIABLE GESCHWIDIGKEITS)*	CUBÍCULO ELECTRICO Hp 35-40-50 / kW26-30-37 (VELOCIDAD VARIABLE)
15	TARGHETTE	*LABELS*	PLAQUE	*SCHILD*	PLACA
16	RECUPERO DI ENERGIA (Hp 30-35 / Kw22-26)	*ENERGY RECOVERY (Hp 30-35 / Kw22-26)*	RECUPERATION D'ENERGIE (Hp 30-35 / Kw22-26)	*ENERGIERÜCKGEWINNUNG (Hp 30-35 / Kw22-26)*	RECUPERACION DE ENERGIA (Hp 30-35 / Kw22-26)
17	RECUPERO DI ENERGIA (Hp 40-50 / Kw30-37)	*ENERGY RECOVERY (Hp 40-50 / Kw30-37)*	RECUPERATION D'ENERGIE (Hp 40-50 / Kw30-37)	*ENERGIERÜCKGEWINNUNG (Hp 40-50 / Kw30-37)*	RECUPERACION DE ENERGIA (Hp 40-50 / Kw30-37)
18	OPZIONE FILTRI (Hp 30-35 / kW22-26)	*OPTION FILTERS (Hp 30-35 / kW22-26)*	FILTER D'OPTION (Hp 30-35 / kW22-26)	*OPTION FILTER (Hp 30-35 / kW22-26)*	FILTROS OPCIONALES (Hp 30-35 / kW22-26)
19	OPZIONE FILTRI (Hp 40-50 / kW30-37)	*OPTION FILTERS (Hp 40-50 / kW30-37)*	FILTER D'OPTION (Hp 40-50 / kW30-37)	*OPTION FILTER (Hp 40-50 / kW30-37)*	FILTROS OPCIONALES (Hp 40-50 / kW30-37)
20	ASPIRAZIONE DELL'ARIA AD ELEVATA EFFICIENZA	*HEAVY DUTY INLET FILTER*	ASPIRATION D'AIR HAUTE EFFICACITE	*ANSAUGEN LUFT HOHE WIRKSAMKEIT*	ASPIRACIÓN DE AIRE ALTA EFICACIA
21	SEPARATORE DI CONDENSA SENZA DRYER (Hp 30-35 / Kw22-26)	*WATER SEPARATOR WITHOUT DRYER (Hp 30-35 / Kw22-26)*	SEPARATEUR DE CONDENSAT SANS SÉCHEUR (Hp 30-35 / Kw22-26)	*KONDENSATABSCHEIDER OHNE TROKNER (Hp 30-35 / Kw22-26)*	SEPARADOR DE CONDENSADOS SIN SECADORA (Hp 30-35 / Kw22-26)
22	SEPARATORE DI CONDENSA CON DRYER (Hp 30-35 / Kw22-26)	*WATER SEPARATOR WITH DRYER (Hp 30-35 / Kw22-26)*	SEPARATEUR DE CONDENSAT AVEC SÉCHEUR (Hp 30-35 / Kw22-26)	*KONDENSATABSCHEIDER MIT TROKNER (Hp 30-35 / Kw22-26)*	SEPARADOR DE CONDENSADOS CON SECADORA (Hp 30-35 / Kw22-26)
23	SEPARATORE DI CONDENSA (Hp 40-50 / Kw30-37)	*WATER SEPARATOR (Hp 40-50 / Kw30-37)*	SEPARATEUR DE CONDENSAT (Hp 40-50 / Kw30-37)	*KONDENSATABSCHEIDER (Hp 40-50 / Kw30-37)*	SEPARADOR DE CONDENSADOS (Hp 40-50 / Kw30-37)
24	SCARICATORE AUTOMATICO DI CONDENSA	*AUTOMATIC CONDENSATE DRAIN*	SÉPARATEUR AUTOMATIQUE DE CONDENSAT	*AUTOMATISCHER KONDENSATABLASS*	DRENAJE AUTOMÁTICO DE CONDENSADO
25	ESSICCATORE D'ARIA (HP 35 / kW26)	*AIR DRYER (HP 35 / kW26)*	SECHEUR D'AIR (HP 35 / kW26)	*LUFTTROCKNER (HP 35 / kW26)*	SECADOR DE AIRE(HP 35 / kW26)
26	ESSICCATORE D'ARIA (HP 40-50 / Kw30-37)	*AIR DRYER (HP 40-50 / Kw30-37)*	SECHEUR D'AIR (HP 40-50 / Kw30-37)	*LUFTTROCKNER (HP 40-50 / Kw30-37)*	SECADOR DE AIRE (HP 40-50 / Kw30-37)
27	RESISTENZE PER RISCALDAMENTO (220-230V)	*CANOPY HEATER (220-230V)*	RESISTANCES CHAUFFANTES (220-230V)	*ZUSATZHEIZELEMENT (220-230V)*	CALENTADOR SUPLEMENTARIO (220-230V)
28	RESISTENZE PER RISCALDAMENTO (230-460V) VELOCITA' FISSA	*CANOPY HEATER (230-460V) FIX SPEED*	RESISTANCES CHAUFFANTES (230-460V) VITESSE FIXE	*ZUSATZHEIZELEMENT (230-460V) DREHRICHTUNG FESTE DREHZAHL*	CALENTADOR SUPLEMENTARIO (230-460V) VELOCIDAD FIJA
29	RESISTENZE PER RISCALDAMENTO (460V) VELOCITA' VARIABILE	*CANOPY HEATER (460V) VSD*	RESISTANCES CHAUFFANTES (460V) VITESSE VARIABLE	*ZUSATZHEIZELEMENT (460V) DREHRICHTUNG VARIABLE GESCHWIDIGKEITS*	CALENTADOR SUPLEMENTARIO (460V) VELOCIDAD VARIABLE
30	KIT DI MANUTENZIONE	*SERVICE KITS*	KITS DE MAINTENANCE	*AUFBAUSATZ DES WARTUNG*	KIT DE MANTENIMIENTO

TAB. 1 MOTOR-COMPRESSOR UNIT (FIXED SPEED)

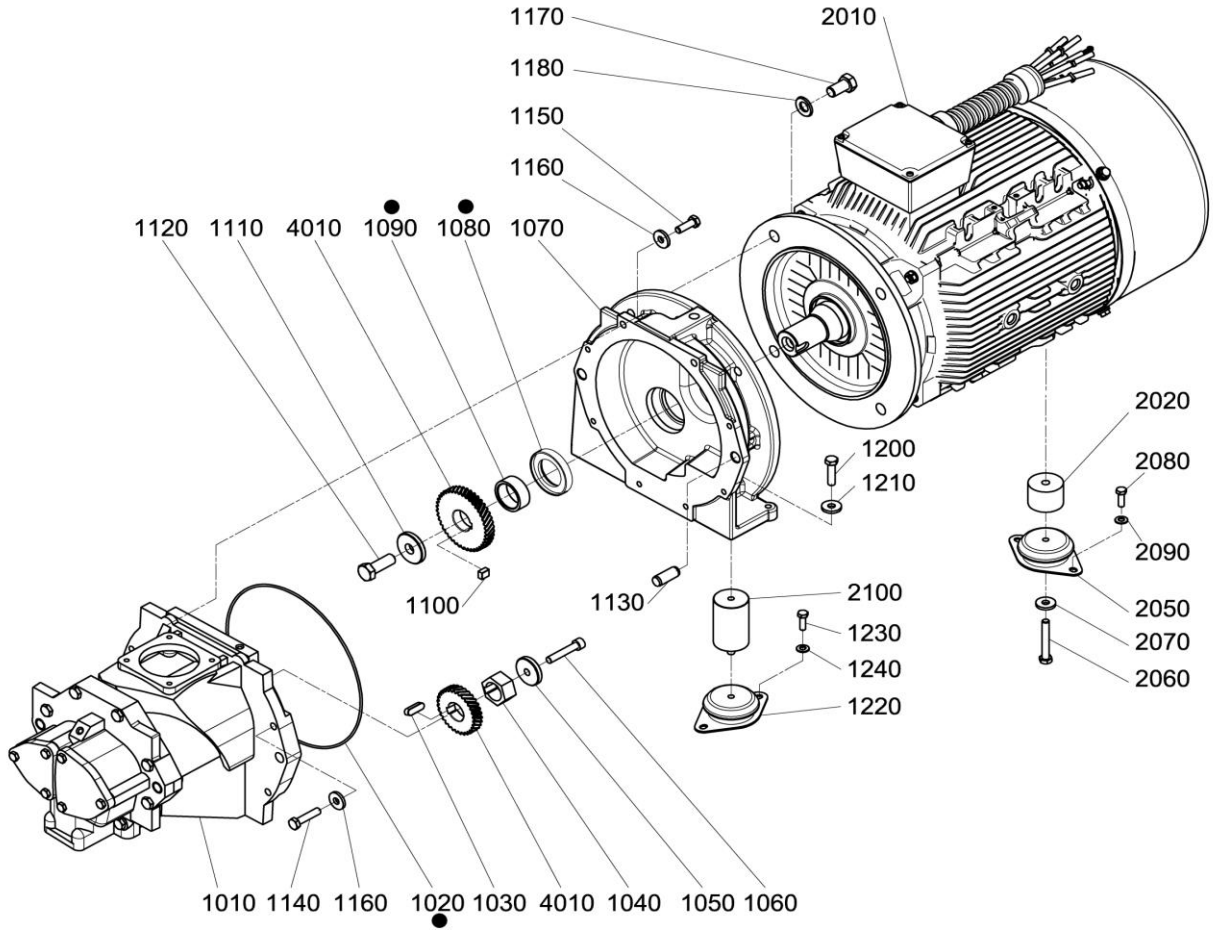

TAB. 1 MOTOR-COMPRESSOR UNIT (FIXED SPEED)

Ref	Part Number	Qty	Description	Ref	Part Number	Qty	Description
1 010	1616 7382 90	1	Element	4 010		1	Gears
1 020	0663 2103 22	1	O-ring		1622 6167 93		Hp35 60Hz bar 7,5
1 030	0337 0009 45	1	Parallel key		1622 6167 67		Hp35 60Hz bar 8,5
1 040	1622 3400 00	1	Spacer		1622 6167 88		Hp35 60Hz bar 10
1 050	1622 3401 00	1	Washer		1622 6167 87		Hp35 60Hz bar 13
1 060	0211 1368 00	1	Screw		1622 6167 90		Hp40 60Hz bar 7,5
1 070	1622 0007 00	1	Casing		1622 6167 94		Hp40 60Hz bar 8,5
1 080	1616 5742 80	1	Seal ring		1622 6167 67		Hp40 60Hz bar 10
1 090	1622 0009 00	1	Bushing		1622 6167 88		Hp40 60Hz bar 13
1 100	0337 0009 42	1	Parallel key		1622 6167 68		Hp50 60Hz bar 7,5
1 110	1622 0010 00	1	Washer		1622 6167 79		Hp50 60Hz bar 8,5
1 120	0147 1478 03	1	Screw		1622 6167 94		Hp50 60Hz bar 10
1 130	0101 1951 40	2	Parallel pin		1622 6167 67		Hp50 60Hz bar 13
1 140	0147 1367 03	6	Screw	•	2901 5005 00	1	Shaft seal kit
1 150	0147 1365 03	2	Screw				
1 160	6210 0364 00	8	Washer				
1 170	0147 1475 03	4	Screw				
1 180	6210 0367 00	4	Washer				
1 200	0147 1365 03	2	Screw				
1 210	6210 0364 00	2	Washer				
1 220	1613 6752 01	2	Puffer				
1 230	0147 1325 03	4	Screw				
1 240	2202 9045 01	4	Washer				
2 010		1	Motor				
	2204 1065 00		Hp35 230-460/60Hz				
	2204 1206 30		Hp40 230-460/60Hz				
	2204 1101 00		Hp50 230-460/60Hz				
	2204 1067 00		Hp35 575/60Hz				
	2204 1206 40		Hp40 575/60Hz				
	2204 1102 00		Hp50 575/60Hz				
2 020	2204 1078 01	1	Spacer support motor				
2 050	1613 6752 16	1	Puffer				
2 060	0147 1371 03	1	Screw				
2 070	6210 0364 00	1	Washer				
2 080	0147 1325 03	2	Screw				
2 090	2202 9045 01	2	Washer lock				
2 100		2	Spacer				
	6224 4306 00		Motor Hp35 V.220-230-460/60				
	2204 1177 00		Motor Hp40-50 V.220-230-460/60				

TAB. 2 MOTOR-COMPRESSOR UNIT (VSD)

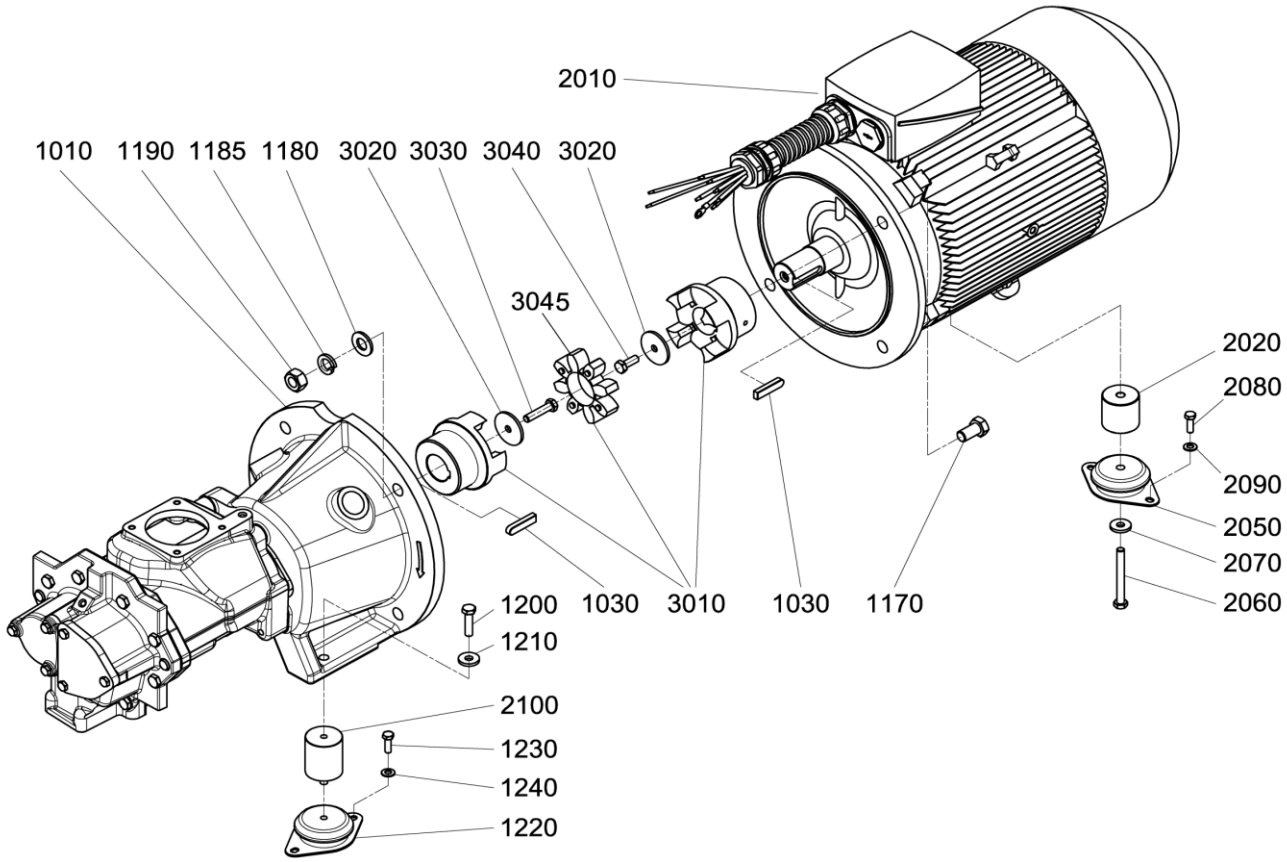

TAB. 2 MOTOR-COMPRESSOR UNIT (VSD)

Ref	Part Number	Qty	Description	Ref	Part Number	Qty	Description
1 010	1616 7651 95	1	Element				
1 030	0337 6063 00	1	Parallel key				
1 170	0147 1107 05	4	Screw				
1 180	0301 2386 00	4	Washer				
1 185	0333 2145 00	4	Lock washer				
1 190	0261 1090 84	4	Nut				
1 200	0147 1365 03	2	Screw				
1 210	6210 0364 00	2	Washer				
1 220	1613 6752 01	2	Puffer				
1 230	0147 1325 03	4	Screw				
1 240	2202 9045 01	4	Washer lock				
2 010		1	Motor				
	2204 1096 00		Hp35				
	2204 1097 00		Hp40				
	2204 1098 00		Hp50				
2 020	2204 1202 00	1	Spacer				
2 050	1613 6752 16	1	Puffer				
2 060	0147 1374 03	1	Screw				
2 070	6210 0364 00	2	Washer				
2 080	0147 1325 03	2	Screw				
2 090	2202 9045 01	2	Washer lock				
2 100	6224 4306 00	2	Spacer				
3 010	2204 1179 00	1	Coupling				
3 020	2204 1104 00	2	Washer				
3 030	0147 1367 03	1	Screw				
3 040	0147 1363 03	1	Screw				
3 045	2204 1034 50	1	Spider				
	2901 1580 00	1	Shaft seal kit				

TAB. 3 UNLOADER VALVE

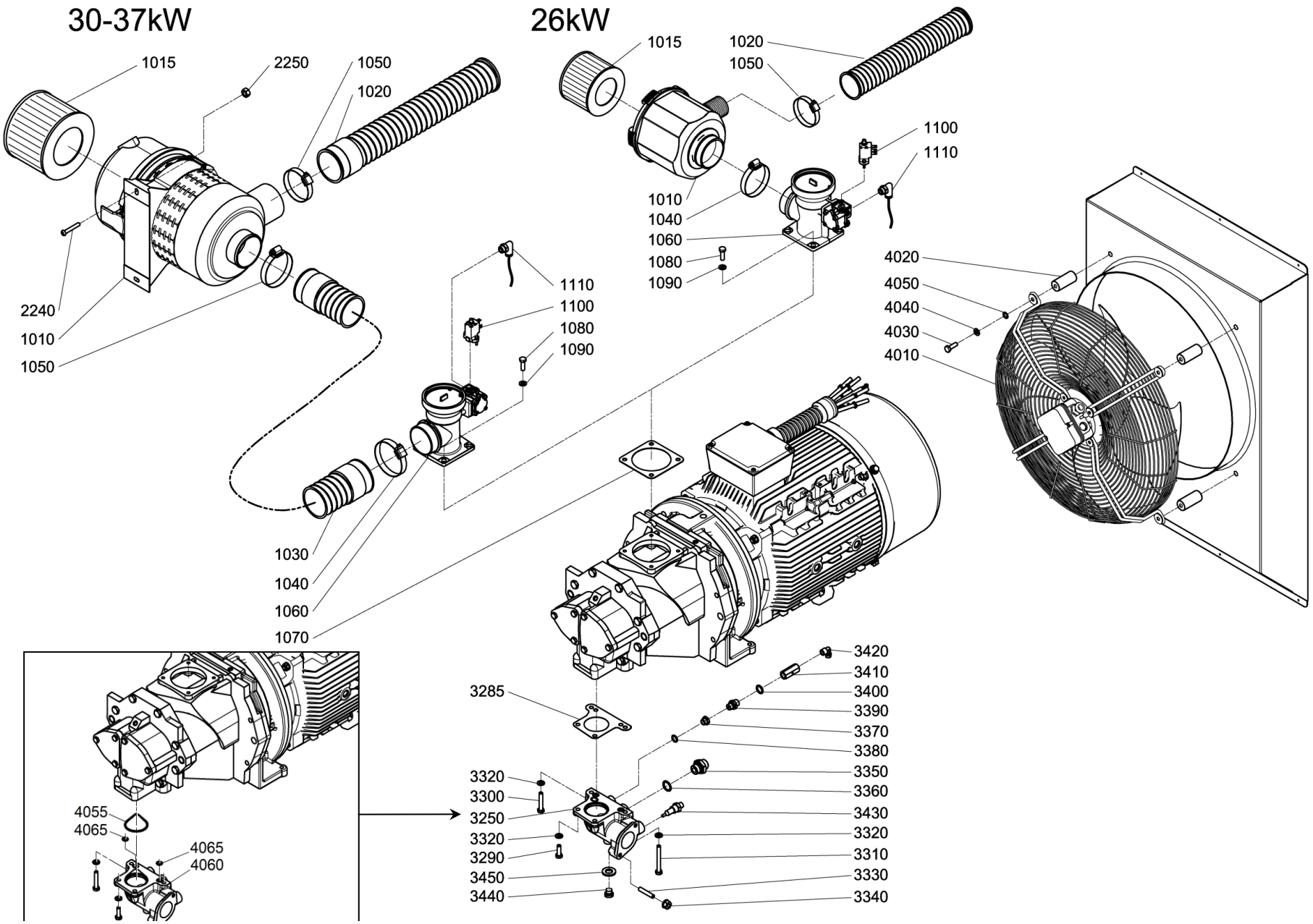

TAB. 3 UNLOADER VALVE

Ref	Part Number	Qty	Description	Ref	Part Number	Qty	Description
1 010		1	Air filter assembly	3 450	0661 1000 38	1	Seal washer
	6211 4721 00		Hp35 kW26	4 010	1624 9667 00	1	Fan V.460-60Hz
	1631 0394 80		Hp40-50 / 30-37kW	4 020	2203 0210 02	4	Spacer
1 015	6211 4723 50	1	Filter element Hp35 kW26	4 030	0147 1337 03	4	Screw
	1092 1001 90	1	Filter element Hp40-50 / 30-37kW	4 040	0300 8019 00	4	Washer
1 020			Hose airinlet	4 050	0333 3100 17	4	Washer lock
	2204 1230 00	1	Hp40-50 / 30-37kW	4 055	0663 2120 44	1	O-ring (2nd Serie)
	2204 1188 00	1	Hp35 kW26	4 060	1622 2727 10	1	Flange outlet (2nd Serie)
1 030	2204 1180 00	1	Hp40-50 / 30-37kW	4 065	0663 3116 00	2	O-ring (2nd Serie)
1 040	0347 6100 16	1	Hose clamp				
1 050			Hose clamp				
	0347 6113 00	1	Hp35 kW26				
	0347 6131 00	2	Hp40-50 / 30-37kW				
1 060	2204 1328 80	1	Unloader valve				
1 070	1622 7811 00	1	Gasket				
1 080	0147 1325 03	4	Screw				
1 090	2202 9045 01	4	Washer				
1 100	2202 7298 01	1	Solenoid valve				
1 110	0583 8120 67	1	Coupling				
2 240	2202 9021 00	2	Screw				
2 250	0291 1185 29	2	Nut				
3 250	2204 1198 00	1	Flange outlet				
3 285	2204 1257 00	1	Gasket (1st Serie)				
3 290	0147 1325 03	2	Screw				
3 300	0147 1329 03	1	Screw				
3 310	0147 1337 03	1	Screw				
3 320	2202 9045 01	4	Washer				
3 330	0190 1329 00	2	Screw				
3 340	0291 1185 30	2	Nut				
3 350	0603 5522 03	1	Nipple				
3 360	0661 1000 39	1	Seal washer				
3 370	2200 7506 47	1	Coupling				
3 380	0661 1000 42	1	Seal washer				
3 390	2202 2130 45	1	Nozzle				
3 400	0661 1000 38	1	Seal washer				
3 410	0823 0050 39	1	Valve non return				
3 420	9740 2004 32	1	Elbow coupling				
3 430	1089 0574 15	1	Sensor temperature				
3 440	0686 3716 01	1	Plug				

TAB. 4 UNLOADER VALVE (HP 35-40-50 / 26-30-37 kW)

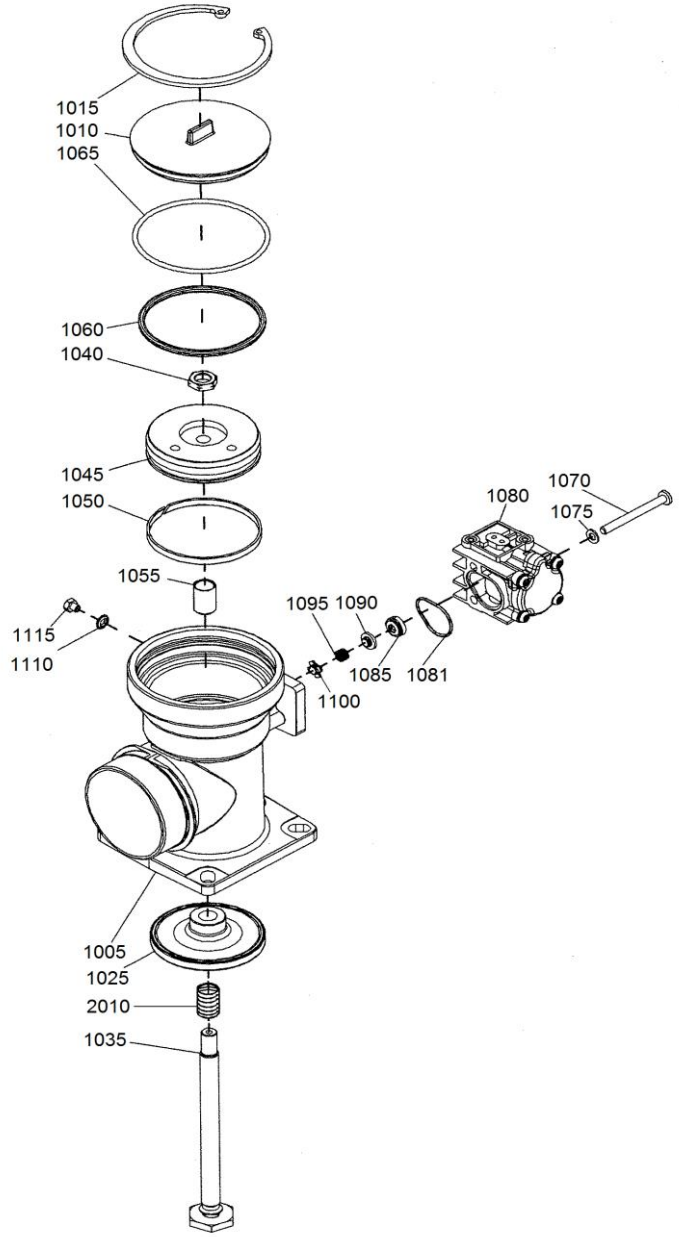

TAB. 4 UNLOADER VALVE (HP 35-40-50 / 26-30-37 kW)

Ref	Part Number	Qty	Description	Ref	Part Number	Qty	Description
1 005		1	Body valve				
1 010	1622 1717 00	1	Cover				
1 015	0335 2164 00	1	Circlip				
1 025	1622 1755 80	1	Valve ass'y				
1 035	1622 1773 10	1	Rod				
1 040	0261 1099 40	1	Nut				
1 045	1622 1789 00	1	Piston				
1 050	1622 1790 00	AR	Guidance tape				
1 055	1622 1797 05	1	Bushing				
1 060	1622 1798 00	1	Quad-ring				
1 065	0663 2104 98	1	O-ring				
1 070	0160 0996 86	2	Screw				
1 075	0301 2318 00	2	Washer				
1 080	1622 3694 80	1	Blow off valve				
1 081	0663 2111 55	1	O-ring				
1 085	1622 2906 00	1	Bushing				
1 090	1622 2905 00	1	Sealing				
1 095	1622 2904 00	1	Spring				
1 100	1622 2903 00	1	Spring guide				
1 110	0661 1013 00	1	Washer				
1 115	0686 3716 69	1	Plug				
2 010	1613 6802 01	1	Spring				
	2204 1328 80	1	Valve regulation ass.				
	2901 3581 00	1	Unloading valve kit				

TAB. 5 RECEIVER ASSEMBLY / COOLER, AIR AND OIL CIRCUIT (HP 35 / kW26)

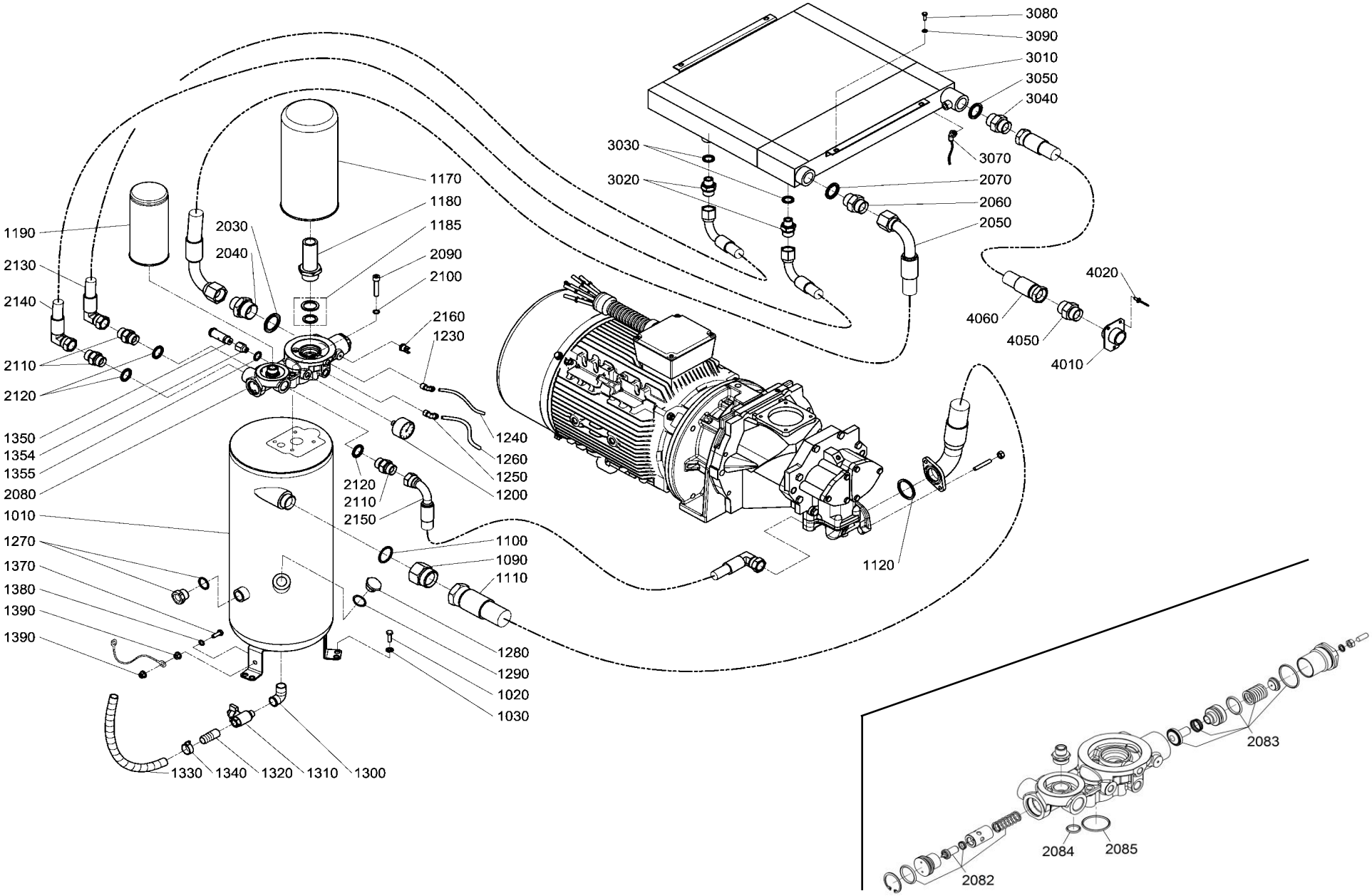

TAB. 5 RECEIVER ASSEMBLY / COOLER, AIR AND OIL CIRCUIT (HP 35 / kW26)

Ref	Part Number	Qty	Description	Ref	Part Number	Qty	Description
1 010		1	Vessel	2 110	06034 243 02	3	Nipplo
	2203 0031 00		ASME-LLOYD-CRN	2 120	0661 1000 43	3	Seal washer dowty
1 020	0147 1325 03	1	Screw	2 130	2202 9325 14	1	Hose flexible
1 030	2202 9045 01	3	Washer lock	2 140	2202 9325 13	1	Hose flexible
1 090	2204 1248 00	1	Nipple	2 150	2204 1184 04	1	Hose flexible
1 100	0653 0500 78	1	Gasket	2 160	2204 1209 01	1	Temp switch
1 110	2204 1246 00	1	Pipe element outlet	3 010	2203 0400 00	1	Cooler
1 120	0663 7134 00	1	O-ring	3 020	0603 5522 03	2	Nipple
1 170	6221 3725 50	1	Separator oil	3 030	0661 1000 39	2	Seal washer dowty
1 180	6231 9326 00	1	Air nipple	3 040	0571 0035 77	1	Nipple
1 185	6231 3388 00	1	Kit O-ring air nipple	3 050	0661 1000 44	1	Seal washer dowty
1 190	2204 1331 50	1	Oil filter	3 070	9090 1519 00	1	Coupling
1 200	2200 6001 03	1	Pressure gauge	3 080	0147 1246 03	3	Screw
1 230	9740 2004 32	1	Elbow coupling	3 090	0333 3100 05	3	Lock washer
1 240	0070 6002 48	X	Hose rilsan 6x4 (in meters)	4 010	6275 6131 19	1	Pipe fl.air outlet
1 250	2202 7639 02	1	Coupling	4 020	0129 3270 38	3	Rivet
1 260	0070 6002 15	X	Hose rilsan 10x8 (in meters)	4 050	0606 0000 27	1	Nipple
1 270	2200 7599 10	1	Plug level sight	4 060	2203 0643 08	1	Hose flexible
1 280	2202 2124 21	1	Plug oil charge				
1 290	0663 2105 90	1	O-ring				
1 300	0560 1305 03	1	Elbow				
1 310	2200 7601 07	1	Ball valve				
1 320	2200 7513 22	1	Drain pipe				
1 330	2200 6503 40	X	Discarge hose (in meters)				
1 340	0347 6109 00	2	Cable tie				
1 350	0830 1010 20	1	Safety valve ASME/CRN				
1 354	2202 9666 00	1	Reducer npt				
1 355	0661 1000 40	1	Seal washer dowty				
1 370	0147 1325 03	2	Screw				
1 380	0333 3100 17	1	Washer				
1 390	0291 1185 30	2	Nut				
2 030	0661 1000 45	1	Seal washer				
2 040	0603 4200 23	1	Fitting				
2 050	2203 0643 07	1	Hose flexible				
2 060	0571 0035 77	1	Nipple				
2 070	0661 1000 44	1	Seal washer dowty				
2 080	2204 1264 02	1	Thermostatic valve assembly				
2 082	2200 5998 25	1	Kit thermostatic valve				
2 083	2200 9009 44	1	Kit minimum pressure valve				
2 084	0663 9822 00	1	O-ring				
2 085	0663 2113 23	1	O-ring				
2 090	0211 1367 03	4	Screw				
2 100	0333 3100 31	2	Washer lock				

TAB. 6 RECEIVER ASSEMBLY / COOLER, AIR AND OIL CIRCUIT (HP 40-50 / kW30-37)

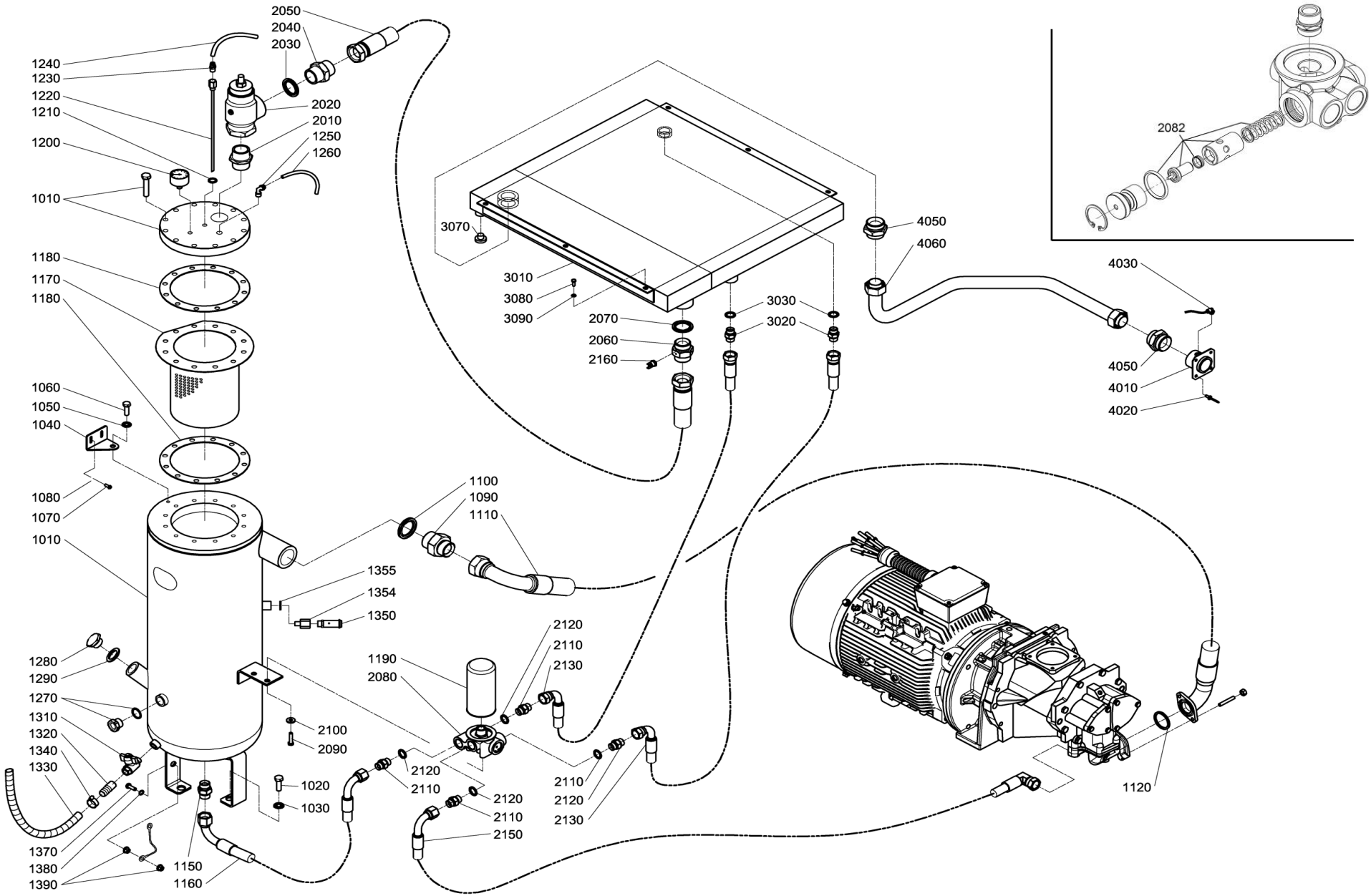

TAB. 6 RECEIVER ASSEMBLY / COOLER, AIR AND OIL CIRCUIT (HP 40-50 / kW30-37)

Ref	Part Number	Qty	Description	Ref	Part Number	Qty	Description
1 010	2204 1254 00	1	Vessel (ASME-LLOYD-CRN)	2 060	2204 1183 00	1	Nipple
1 020	0147 1360 03	2	Screw	2 070	0661 1000 45	1	Seal washer
1 030	6210 0364 00	2	Washer	2 080	2202 2606 08	1	Thermostatic valve assembly
1 040	2204 1149 00	1	Stirrup oilvessel	2 082	2200 5998 25	1	Kit thermostatic valve
1 070	0215 0003 91	2	Screw	2 090	0147 1323 03	2	Screw
1 080	0300 0274 64	2	Washer	2 100	2202 9045 01	2	Washer lock
1 090	0603 4200 31	1	Nipple	2 110	0603 4243 02	4	Nipplo
1 100	0661 1000 47	1	Seal washer	2 120	0661 1000 43	4	Seal washer dowty
1 110	2204 1185 00	1	Hose flexible air/oil	2 130	2202 8681 10	2	Hose flexible
1 120	0663 7134 00	1	O-ring	2 150	2204 1184 02	1	Hose flexible
1 150	0571 0035 52	1	Nipple	2 160	2204 1209 01	1	Temp. switch
1 160	2204 1184 01	1	Hose flexible	3 010	2204 1186 00	1	Cooler air-oil
1 170	6221 3744 50	1	Element oil separator	3 020	0603 4243 02	2	Nipplo
1 180	2204 1197 00	2	Gasket	3 030	0661 1000 43	2	Seal washer dowty
1 190	2204 1331 50	1	Oil filter	3 070	0686 3718 12	1	Plug
1 200	2200 6001 03	1	Pressure gauge	3 080	0147 1246 03	1	Screw
1 210	0661 1000 38	1	Seal washer dowty	3 090	0333 3100 05	1	Lock washer
1 220	2204 1181 00	1	Scavenge line	4 010	2204 1178 00	1	Air outlet
1 230	0583 8181 18	1	Straight coupling	4 020	0129 3270 38	4	Rivet
1 240	0070 6002 48	X	Hose rilsan 6x4 (in meters)	4 030	9090 1518 00	1	Elbow coupl.
1 250	2202 7639 02	1	Coupling	4 050	0580 0018 50	2	Nipple
1 260	0070 6002 15	X	Hose rilsan 10x8 (in meters)	4 060	2204 1251 00	1	Pipe air outlet cooler
1 270	2200 7599 10	1	Plug level sight				
1 280	2202 2031 24	1	Plug				
1 290	0663 2102 18	1	O-ring				
1 310	2200 7601 07	1	Ball valve				
1 320	2200 7513 22	1	Drain pipe				
1 330	2200 6503 40	X	Discarge hose (in metres)				
1 340	0347 6109 00	2	Cable tie				
1 350	0830 1010 20	1	Safety valve 200 psi (NPT)				
1 354	2202 9666 00	1	Reducer (NPT)				
1 355	0661 1000 40	1	Seal washer dowty				
1 370	0147 1325 03	2	Screw				
1 380	0333 3100 17	1	Washer				
1 390	0291 1185 30	2	Nut				
1 050	0147 1360 03	1	Screw				
1 060	6210 0364 00	1	Washer				
2 010	0603 4108 03	1	Nipple				
2 020	2200 5998 21	1	Minimum pressure valve assembly				
	2202 2511 71	1	Kit minimum pressure valve				
2 030	0661 1000 61	1	Seal washer				
2 040	0603 4200 30	1	Nipple				
2 050	2204 1184 03	1	Hose flexible				

TAB. 7 AIR DRYER / FILTER SEPARATOR (HP 35 / kW26)

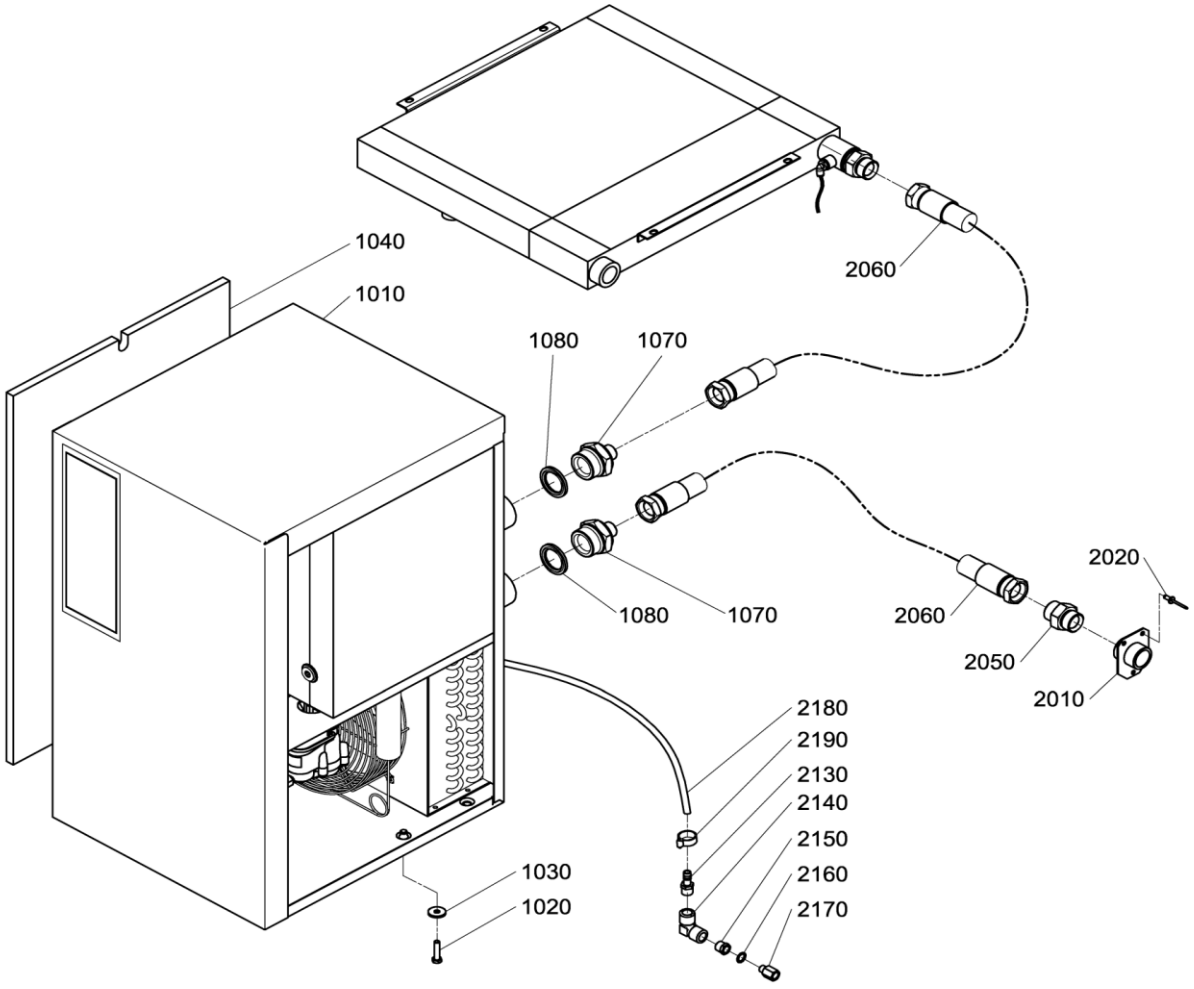

TAB. 7 AIR DRYER / FILTER SEPARATOR (HP 35 / kW26)

Ref	Part Number	Qty	Description	Ref	Part Number	Qty	Description
1 010	2200 9027 99	1	DRYER V. 230/60 Hz (CE-UL)				
1 020	0147 1325 03	2	Screw				
1 030	2202 9045 01	2	Washer lock				
1 040	2203 0353 01	1	S. foam				
1 070	0603 4200 25	2	Nipple				
1 080	0661 1000 61	2	Seal washer				
2 010	6275 6131 19	1	Pipe				
2 020	0129 3270 38	3	Rivet				
2 050	0606 0000 27	1	Nipple				
2 060	2203 0643 02	1	Hose flexible				
2 130	6221 9973 00	1	Coupling rubber hose				
2 140	0560 4400 82	1	Elbow				
2 150	6231 9269 00	1	Reduction				
2 160	6211 6690 00	1	Gasket				
2 170	6221 9610 00	1	Coupling				
2 180	0070 6002 49	X	Plastic tube (in meters)				
2 190	0347 6100 52	2	Clamp				

TAB. 8 AIR DRYER / FILTER SEPARATOR (HP 40-50 / kW30-37)

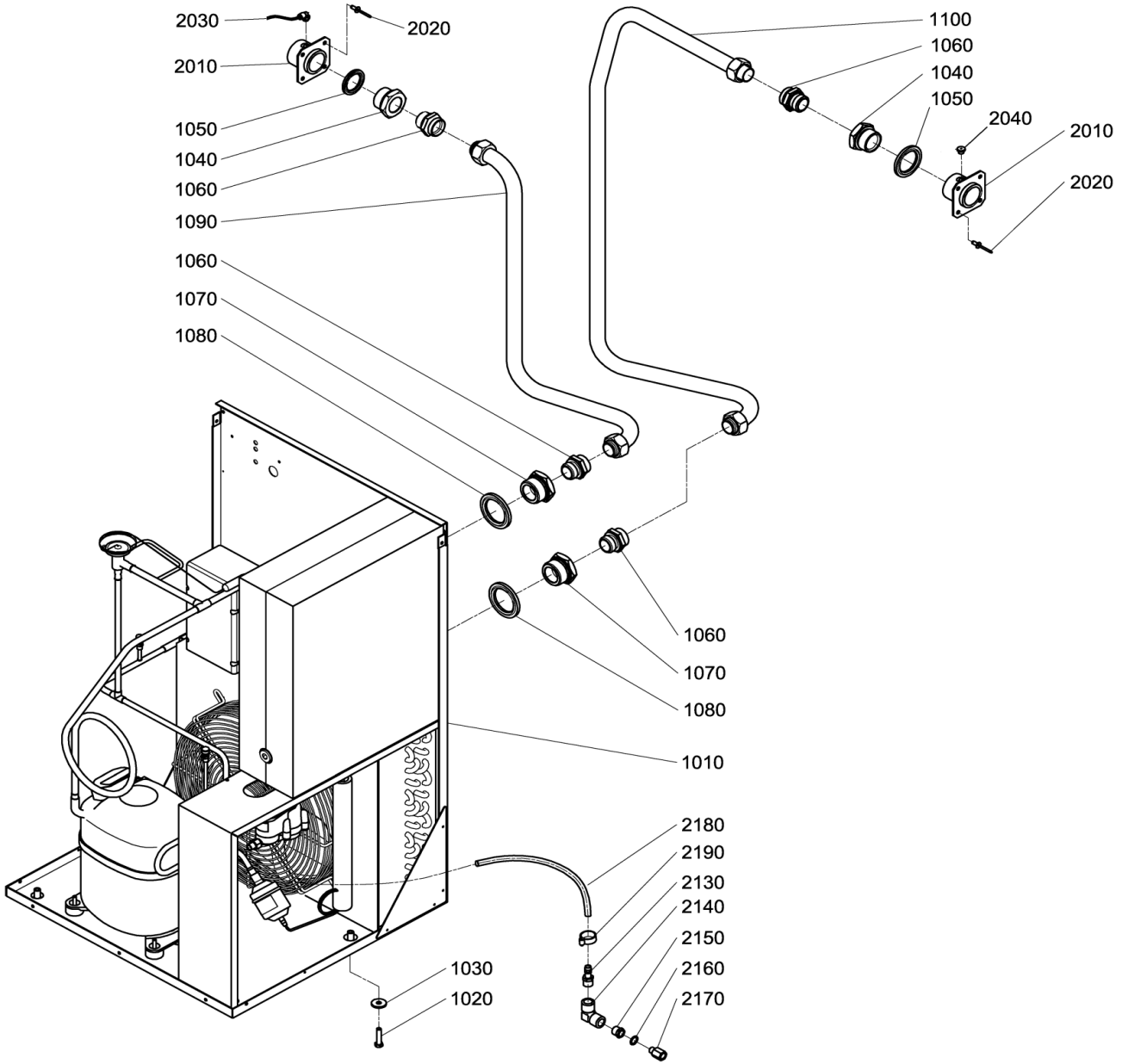

TAB. 8 AIR DRYER / FILTER SEPARATOR (HP 40-50 / kW30-37)

Ref	Part Number	Qty	Description	Ref	Part Number	Qty	Description
1 010	2200 9027 83	1	DRYER V. 230/60 Hz (CE-UL)				
1 020	0147 1325 03	3	Screw				
1 030	2202 9045 01	2	Washer lock				
1 040	0605 8701 87	2	Bushing reducer				
1 050	0661 1000 45	2	Seal washer				
1 060	0580 0017 37	4	Fitting				
1 070	0605 8700 70	2	Bushing reducer				
1 080	0661 1000 61	2	Seal washer				
1 090	2204 1192 00	1	Pipe				
1 100	2204 1193 00	1	Pipe				
1 110	2205 0301 61	1	Cubicle dryer				
2 010	2204 1178 00	2	Air outlet				
2 020	0129 3270 38	8	Blind rivet				
2 030	9090 1518 00	1	Elbow coupl.				
2 040	0686 3718 25	1	Plug				
2 120	0989 4220 08	2	Grommet				
2 130	6221 9973 00	2	Coupling rubber hose				
2 140	0560 4400 82	2	Elbow				
2 150	6231 9269 00	2	Reduction				
2 160	6211 6690 00	2	Gasket				
2 170	6221 9610 00	2	Coupling				
2 180	0070 6002 49	X	Plastic tube (in meters)				
2 190	0347 6100 52	2	Clamp				

TAB. 9 BODYWORK ASSEMBLY (HP 35 / kW26)

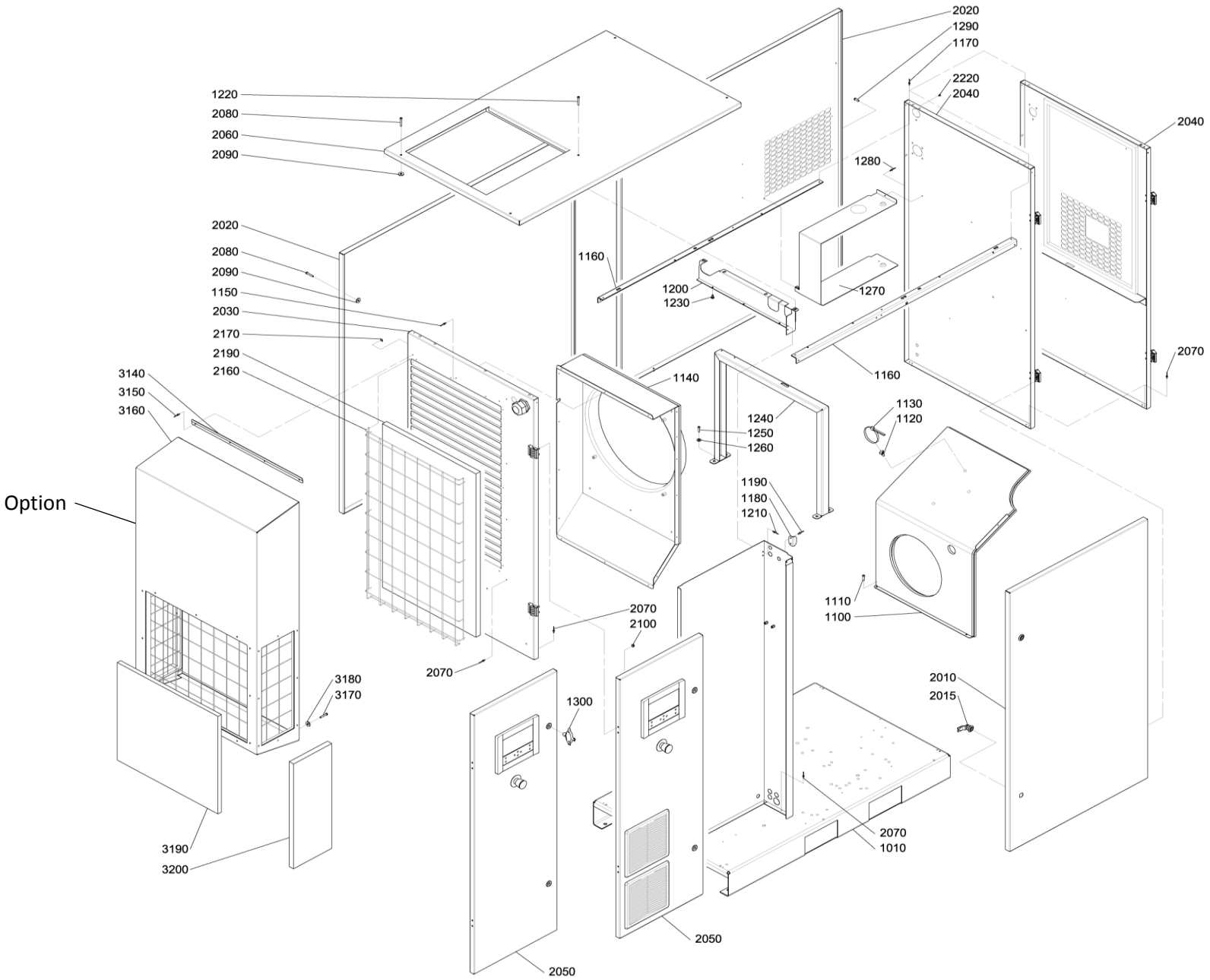

TAB. 9 BODYWORK ASSEMBLY (HP 35 / kW26)

Ref	Part Number	Qty	Description	Ref	Part Number	Qty	Description
1 010	2203 0203 16	1	Frame	2 160	2204 1205 00	1	Grating inlet
1 100		1	Baffle motor	2 170	2200 7302 47	6	Plate
	2204 1249 00		Fixed Speed (FS)	2 190	2204 1203 03	1	Filter
	2204 1250 00		Variable Speed (VS)	2 220	0686 9252 94	4	Plug (only fixed speed)
1 110	0215 0003 91	3	Screw	3 140	2204 1200 00	1	Bracket soundproof baffle (Option)
1 120	6236 3126 00	3	Embase enclipsable	3 150	0129 3270 46	4	Blind rivet (Option)
1 130	0348 0101 20	12	Cable tie	3 160	2204 1199 16	1	Baffle soundproof (Option)
1 140	2204 1157 00	1	Baffle fan	3 170	0215 0003 91	2	Screw (Option)
1 150	0129 3270 46	16	Blind rivet	3 180	0301 2321 00	2	Washer (Option)
1 160	6275 6075 10	2	Corner top	3 190	2204 1203 01	1	Filter (Option)
1 170	0129 3270 46	10	Blind rivet	3 200	2204 1203 02	2	Filter (Option)
1 180	6275 6068 10	2	Bracket lock				
1 190	0129 3270 46	4	Blind rivet				
1 200	2203 0288 00	1	Support cooler				
1 210	0129 3270 46	2	Blind rivet				
1 220	0215 0003 91	2	Screw				
1 230	6236 3126 00	3	Embase enclipsable				
1 240	6275 6089 00	1	Support dryer				
1 250	0147 1325 03	4	Screw				
1 260	2202 9045 01	4	Washer lock				
1 270	2203 0301 00	1	Stirrup dryer				
1 280	0129 3270 46	4	Blind rivet				
1 290	0215 0003 91	1	Screw				
1 300	6215 4359 00	1	Universal key				
2 010	2202 9006 87	1	Panel front				
2 015	6215 4358 00	2	Lock left door				
2 020		1	Panel back				
	2204 1259 17		Panel (without dryer)				
	2203 0300 17		Panel (with dryer)				
2 030	2204 1156 16	1	Panel left				
2 040		1	Panel right				
	6275 6081 17		Panel right (without dryer)				
	2203 0299 17		Panel right (with dryer)				
2 050		1	Door cubicle				
	2203 0264 16		Door cubicle Fixed Speed (FS)				
	2204 1189 16		Door cubicle Variable Speed (VS)				
2 060	2203 0263 16	1	Roof				
2 070	0129 3270 46	9	Blind rivet				
2 080	2202 9021 00	7	Screw				
2 090	2202 9392 01	7	Washer plastic				
2 100	0291 1185 28	8	Nut				

TAB. 10 BODYWORK ASSEMBLY (HP 40-50 / kW30-37)

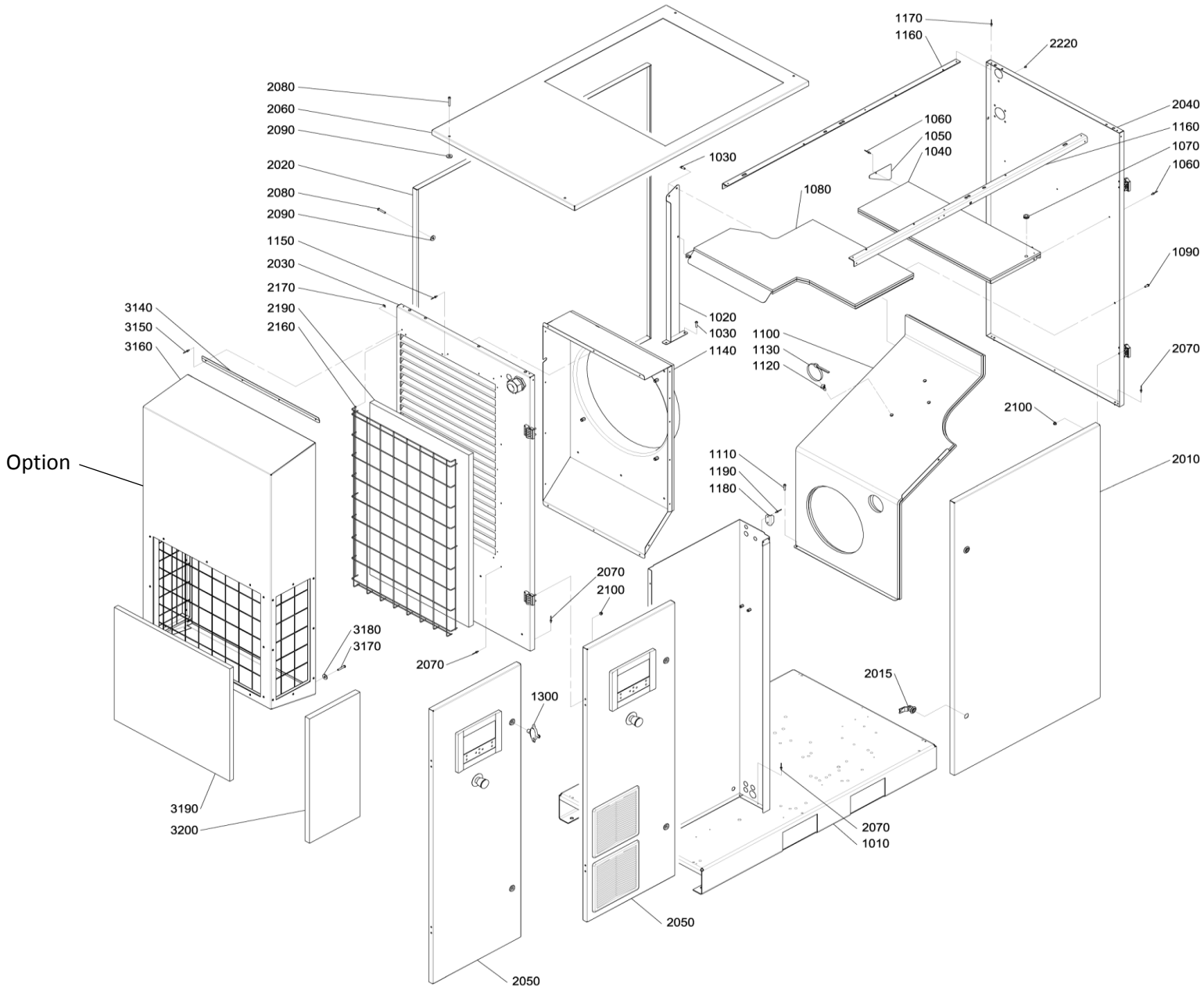

TAB. 10 BODYWORK ASSEMBLY (HP 40-50 / kW30-37)

Ref	Part Number	Qty	Description	Ref	Part Number	Qty	Description
1 010	2203 0203 16	1	Frame	3 180	0301 2321 00	2	Plain washer (Option)
1 020	2204 1145 00	1	Bracket support baffles	3 190	2204 1203 01	1	Filter (Option)
1 030	0215 0003 91	6	Screw	3 200	2204 1203 02	2	Filter (Option)
1 040	2204 1143 00	1	Baffle element top				
1 050	2204 1201 00	1	Bracket top baffle				
1 060	0129 3270 46	4	Blind rivet				
1 070	0989 4220 45	1	Grommet				
1 080	2204 1144 00	1	Baffle element				
1 090	0215 0003 91	2	Screw				
1 100		1	Baffle motor				
	2204 1147 00		Fixed Speed (FS)				
	2204 1146 00		Variable Speed (VSD)				
1 110	0215 0003 91	2	Screw				
1 120	6236 3126 00	3	Embase enclipsable p/collier				
1 130	0348 0101 20	12	Cable tie collare				
1 140	2204 1157 00	1	Baffle fan				
1 150	0129 3270 46	16	Blind rivet				
1 160	6275 6075 10	2	Corner top				
1 170	0129 3270 46	10	Blind rivet				
1 180	6275 6068 10	2	Bracket lock				
1 190	0129 3270 46	4	Blind rivet				
1 300	6215 4359 00	1	Universal key				
2 010	2202 9006 87	1	Panel front				
2 015	6215 4358 00	2	Lock left door				
2 020	2204 1259 17	1	Panel back				
2 030	2204 1156 16	1	Panel left				
2 040	6275 6081 17	1	Panel right				
2 050		1	Door cubicle				
	2203 0264 16		Door cubicle Fixed Speed (FS)				
	2204 1189 16		Door cubicle Variable Speed (VS)				
2 060	2204 1253 16	1	Panel roof				
2 070	0129 3270 46	9	Blind rivet				
2 080	2202 9021 00	7	Screw				
2 090	2202 9392 01	7	Washer plastic				
2 100	0291 1185 28	8	Nut				
2 160	2204 1205 00	1	Grating inlet				
2 170	2200 7302 47	6	Plate				
2 190	2204 1203 03	1	Filter				
2 220	0686 9252 94	3	Plug				
3 140	2204 1200 00	1	Bracket soundproof baffle (Option)				
3 150	0129 3270 46	4	Blind rivet (Option)				
3 160	2204 1199 16	1	Baffle soundproof (Option)				
3 170	0215 0003 91	2	Screw (Option)				

TAB. 11 BODYWORK ASSEMBLY WITH DRYER (HP 40-50 / kW30-37)

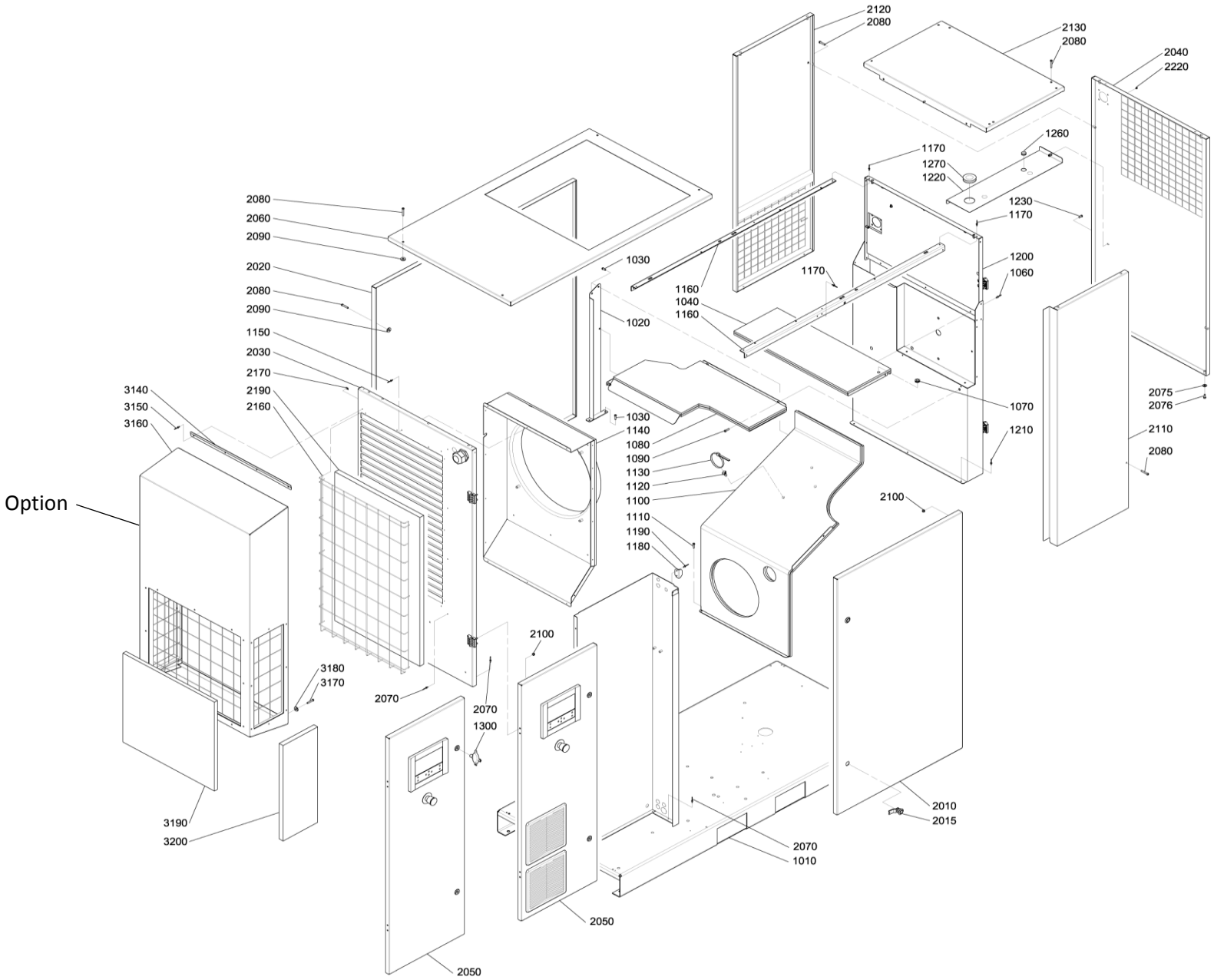

TAB. 11 BODYWORK ASSEMBLY WITH DRYER (HP 40-50 / kW30-37)

Ref	Part Number	Qty	Description	Ref	Part Number	Qty	Description
1 010	2202 9029 16	1	Frame	2 120	2204 1152 17	1	Panel back
1 020	2204 1145 00	1	Bracket support baffles	2 130	2202 9030 16	1	Roof int.dryer
1 030	0215 0003 91	6	Screw	2 160	2204 1205 00	1	Grating inlet
1 040	2204 1143 00	1	Baffle element top	2 170	2200 7302 47	6	Plate
1 060	0129 3270 46	4	Blind rivet	2 190	2204 1203 03	1	Filter
1 070	0989 4220 45	1	Grommet	2 220	0686 9252 94	3	Plug
1 080	2204 1155 00	1	Baffle element	3 140	2204 1200 00	1	Bracket soundproof baffle (Option)
1 090	0215 0003 91	2	Screw	3 150	0129 3270 46	4	Blind rivet (Option)
1 100		1	Baffle motor	3 160	2204 1199 16	1	Baffle soundproof (Option)
	2204 1147 00		Fixed Speed (FS)	3 170	0215 0003 91	2	Screw (Option)
	2204 1146 00		Variable Speed (VSD)	3 180	0301 2321 00	2	Plain washer (Option)
1 110	0215 0003 91	2	Screw	3 190	2204 1203 01	1	Filter (Option)
1 120	6236 3126 00	3	Embase enclipsable	3 200	2204 1203 02	2	Filter (Option)
1 130	0348 0101 20	12	Cable tie collare				
1 140	2204 1157 00	1	Baffle fan				
1 150	0129 3270 46	16	Blind rivet				
1 160	6275 6075 10	2	Corner top				
1 170	0129 3270 46	10	Blind rivet				
1 180	6275 6068 10	2	Bracket lock				
1 190	0129 3270 46	4	Blind rivet				
1 200	2204 1148 00	1	Baffle dryer (Dryer A10)				
1 210	0129 3270 46	4	Blind rivet				
1 220	2204 1194 00	1	Baffle back (Dryer A10)				
1 230	0215 0003 91	2	Screw				
1 260	0989 4220 08	1	Grommet				
1 270	1088 0803 07	1	Grommet				
1 300	6215 4359 00	1	Universal key				
2 010	2202 9006 87	1	Panel front				
2 015	6215 4358 00	2	Lock left door				
2 020	2204 1259 17	1	Panel back				
2 030	2204 1156 16	1	Panel left				
2 040	2204 1151 17	1	Panel right				
2 050		1	Door cubicle				
	2203 0264 16		Door cubicle Fixed Speed (FS)				
	2204 1189 16		Door cubicle Variable Speed (VS)				
2 060	2204 1253 16	1	Panel roof				
2 070	0129 3270 46	7	Blind rivet				
2 075	0147 1246 03	2	Screw				
2 076	6210 0362 00	2	Washer				
2 080	2202 9021 00	18	Screw				
2 090	2202 9392 01	15	Washer plastic				
2 100	0291 1185 28	8	Nut				
2 110	2204 1150 17	1	Panel front				

TAB. 12 ELECTRICAL CUBICLE HP35-40 / kW26-30 (FIXED SPEED)

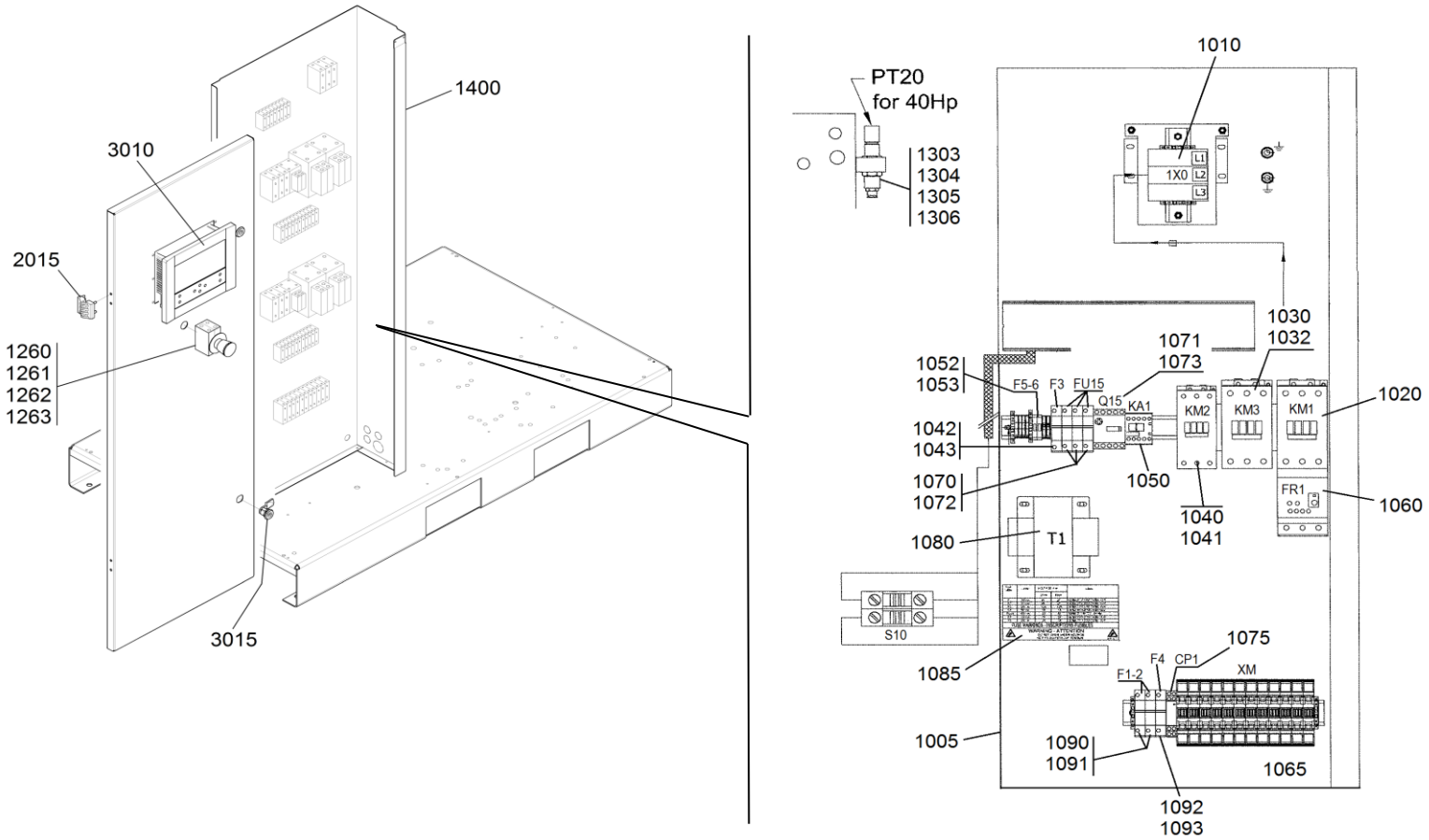

TAB. 12 ELECTRICAL CUBICLE (HP35-40 / kW26-30)

Ref	Part Number	Qty	Description	Ref	Part Number	Qty	Description
1 005		1	Cubicle	1 303	2204 1039 00	1	Pressure sensor
	2205 0300 72		35Hp 230-460V 60Hz UL	1 304	2204 1038 00	1	Adapter
	2205 0300 73		40Hp 230-460V 60Hz UL	1 305	2200 7505 70	1	Adapter
	2205 0300 86		35Hp 230-460V 60Hz CSA	1 306	2204 1036 00	1	Pipe fitting
	2205 0300 87		40Hp 230-460V 60Hz CSA	1 400	2204 1142 00	1	Sheet metal cubicle
	2205 0300 75		35Hp 575V 60Hz CSA	2 015	6215 4353 00	2	Hinge
	2205 0300 76		40Hp 575V 60Hz CSA	3 010		1	Electronic controller
1 010	1089 9366 30	3	Supply terminal block		1900 5200 77		ES4000 STD
1 020			Line contactor		1900 5200 88		ES4000 Graphic
	1089 9554 69	1	35Hp 230-460V 60Hz	3 015		2	Lock
	1089 9554 93	1	40Hp 230-460V 60Hz				
1 030	1089 9554 93	1	Delta contactor				
1 032	1089 9554 95	1	Aux contactor				
1 040	1089 9319 84	1	Star contactor				
1 041	1089 9554 95	1	Aux contactor				
1 042	1089 9168 17	1	Secondary transf fuse				
1 043	1089 9594 01	1	Fuse holder				
1 050	1089 9554 67	1	Auxiliary relay				
1 052	1089 9168 77	2	Controller fuses				
1 053	1089 0506 16	3	Fuse holder				
1 060		1	Compr. Motor overload prot.				
	1089 9553 39		35Hp 230-460V 60Hz				
	1089 9553 19		40Hp 230-460V 60Hz				
1 065	1088 0031 74	12	Terminals				
1 070	1089 9332 79	3	Fan motor fuses protection				
1 071	1089 9512 68	1	Fan motor overload protection				
1 072	1089 9594 06		Fuse holder				
1 073	1089 9512 94	1	Single mounting kit				
1 075	1089 9476 04	1	Phase sequence relay				
1 080	2202 9106 01	1	Control transformer				
1 085	2204 1290 01	1	Label cubicle fuses				
1 090		2	Primary transf. Fuses				
	1089 9168 53		230V 60Hz				
	1089 9168 63		460V 60Hz				
1 091	1089 9594 02	1	Fuse holder				
1 092	1089 9168 48	1	CP1 fuse				
1 093	1089 9594 01	1	Fuse holder				
1 260	1089 9513 34	1	Emergency stop push button				
1 261	1089 9513 28	1	Contact support				
1 262	1089 9513 30	2	NC contact				
1 263	1089 9125 17	1	Yellow ring				

TAB. 13 ELECTRICAL CUBICLE HP50 / kW37 (FIXED SPEED)

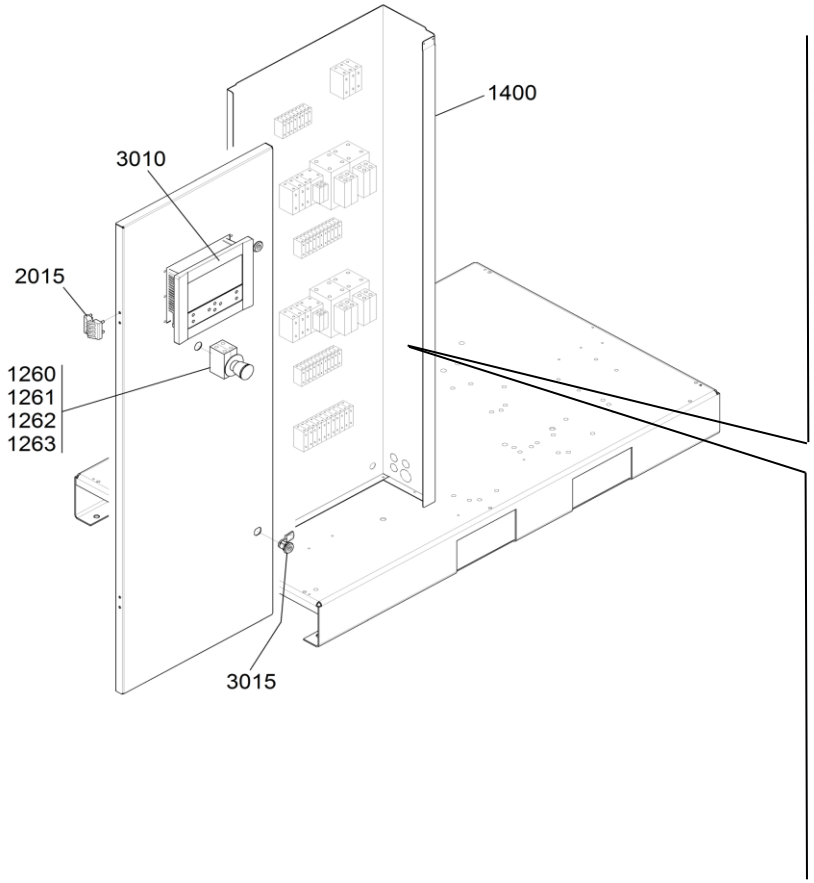

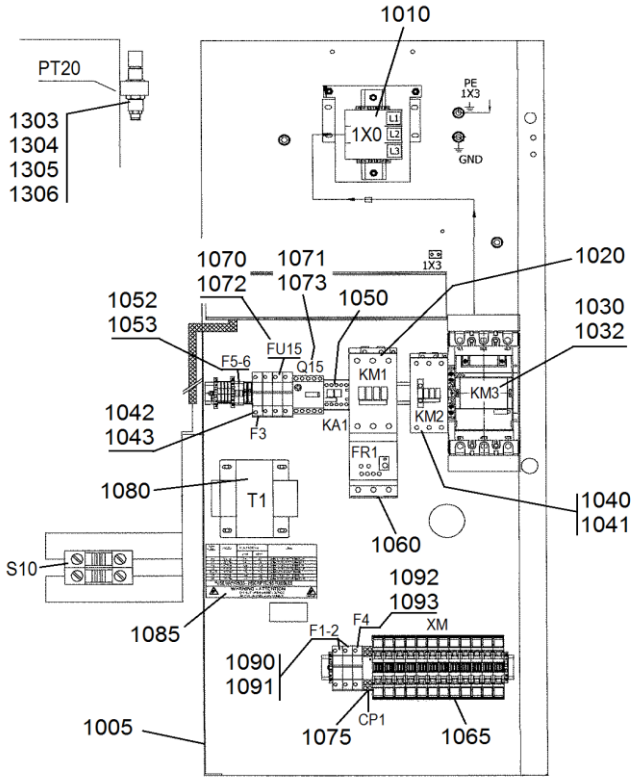

TAB. 13 ELECTRICAL CUBICLE (HP50 / kW37)

Ref	Part Number	Qty	Description	Ref	Part Number	Qty	Description
1 005		1	Cubicle	3 010		1	Electronic controller
	2205 0300 74		50Hp 230-460V 60Hz UL		1900 5200 77		ES4000 STD
	2205 0300 88		50Hp 460V 60Hz CSA		1900 5200 88		ES4000 Graphic
	2205 0300 77		50Hp 575V 60Hz CSA	3 015		2	Lock
1 010	1089 0577 00	3	Supply terminal block				
1 020	1089 9554 92	1	Line contactor				
1 030	1089 9189 99	1	Delta contactor				
1 032	1089 9554 95	1	Aux contactor				
1 040	1089 9554 68	1	Star contactor				
1 041	1089 9602 14	1	Aux contactor				
1 042	1089 9168 17	1	Secondary transf fuse				
1 043	1089 9594 01	1	Fuse holder				
1 050	1089 9554 67	1	Auxiliary relay				
1 052	1089 9168 77	2	Controller fuses				
1 053	1089 0506 16	3	Fuse holder				
1 060	1089 9553 19	1	Compr. Motor overload prot.				
1 065	1088 0039 33	12	Terminals				
1 070	1089 9332 79	3	Fan motor fuses protection				
1 071	1089 9512 68	1	Fan motor overload protection				
1 072	1089 9594 06		Fuse holder				
1 073	1089 9512 94	1	Single mounting kit				
1 075	1089 9476 04	1	Phase sequence relay				
1 080	2202 9106 01	1	Control transformer				
1 085	2204 1290 01	1	Label cubicle fuses				
1 090		2	Primary transf. Fuses				
	1089 9168 53		230V 60Hz				
	1089 9168 63		460V 60Hz				
1 091	1089 9594 02	1	Fuse holder				
1 092	1089 9168 48	1	CP1 fuse				
1 093	1089 9594 01	1	Fuse holder				
1 260	1089 9513 34	1	Emergency stop push button				
1 261	1089 9513 28	1	Contact support				
1 262	1089 9513 30	2	NC contact				
1 263	1089 9125 17	1	Yellow ring				
1 303	2204 1039 00	1	Pressure transmitter				
1 304	2204 1038 00	1	Adapter				
1 305	2200 7505 70	1	Adapter				
1 306	2204 1036 00	1	Pipe fitting				
1 400	2204 1142 00	1	Sheet metal cubicle				
2 015	6215 4353 00	2	Hinge				

TAB. 14 ELECTRICAL CUBICLE (VSD)

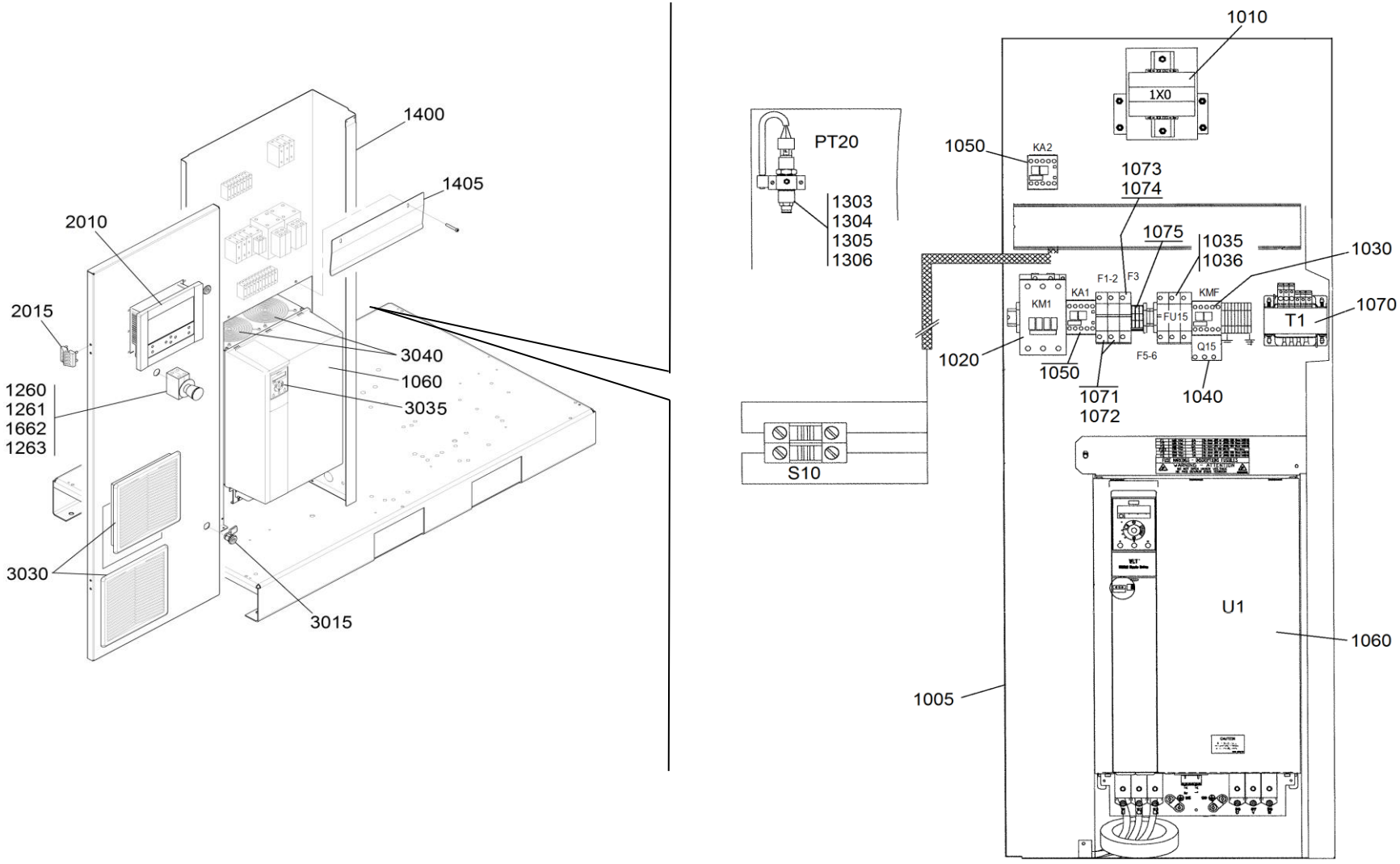

TAB. 14 ELECTRICAL CUBICLE (VSD)

Ref	Part Number	Qty	Description	Ref	Part Number	Qty	Description
1 005		1	Cubicle	2 010		1	Electronic controller
	2205 0300 95		35Hp 460 60Hz UL		1900 5200 78		ES400 Plus
	2205 0300 96		40Hp 460 60Hz UL		1900 5200 88		ES4000 Graphic
	2205 0300 97		50Hp 460 60Hz UL	2 015	6215 4353 00	2	Hinge
	2205 0304 25		35Hp 460 60Hz CSA	3 015		2	Lock
	2205 0304 26		40Hp 460 60Hz CSA	3 030	1089 9556 68	2	Filters
	2205 0304 27		50Hp 460 60Hz CSA	3 035	2901 3569 00	1	LCP
1 010	1089 0506 03	3	Supply terminal block	3 040	2901 3574 00	1	Fan HP 30-35 / kW 22-26
1 020		1	Line contactor		2901 3575 00	1	Fan HP 40 / kW 30
	1089 9554 68		35Hp 460 60Hz		2901 3576 00	2	Fan HP 50 / kW 37
	1089 9554 69		40Hp 460 60Hz				
	1089 9554 93		50Hp 460 60Hz				
1 030	1089 9602 18	1	Fan contactor				
1 035	1089 9594 06	1	Fan fuse holder				
1 036	1089 9332 38	3	Fan fuse				
1 040	1089 9553 29	1	Fan overload protection				
1 050	1089 9554 67	2	Auxiliary relay				
1 060		1	Freq. Converter				
	2204 1093 00		35Hp 460 60Hz				
	2204 1094 00		40Hp 460 60Hz				
	2204 1095 00		50Hp 460 60Hz				
1 070	2202 8689 51	1	Control transformer (Hp35-40-50 460 60Hz)				
1 071	1089 9168 63	2	Primary transf. Fuses				
1 072	1089 9594 02	1	Fuse holder				
1 073	1089 9168 32	1	Secondary transf. Fuses				
1 074	1089 9594 01	1	Fuse holder				
1 075	1089 0506 16	2	Fuse holder				
1 260	1089 9513 34	1	Emergency stop push button				
1 261	1089 9513 28	1	Contact support				
1 262	1089 9513 30	2	NC contact				
1 263	1089 9125 11	1	Yellow ring				
1 303	2204 1039 00	1	Pressure transmitter				
1 304	2204 1038 00	1	Adapter				
1 305	2200 7505 70	1	Adapter				
1 306	2204 1036 00	1	Pipe fitting				
1 400	2204 1080 00	1	Sheet metal cubicle				
1 405		1	Converter baffle				
	2204 1081 00		35-40Hp 460 60Hz				
	2204 1082 00		50Hp 460 60Hz				

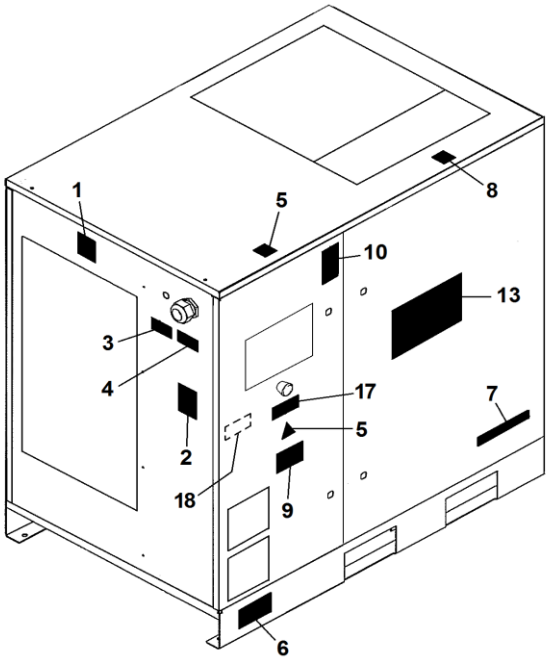
1
5
8
10
13
3
4
17
7
5
2
18
9
6

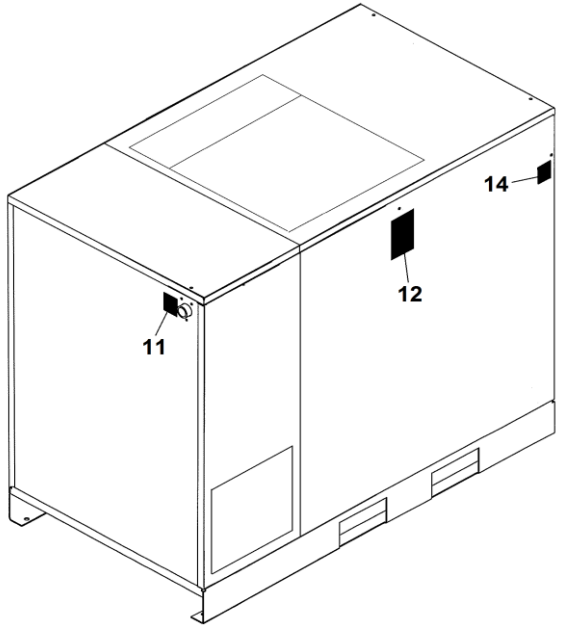
14
12
11

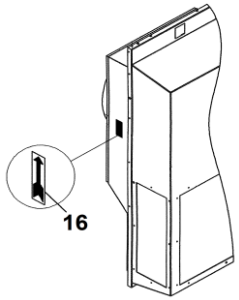
16

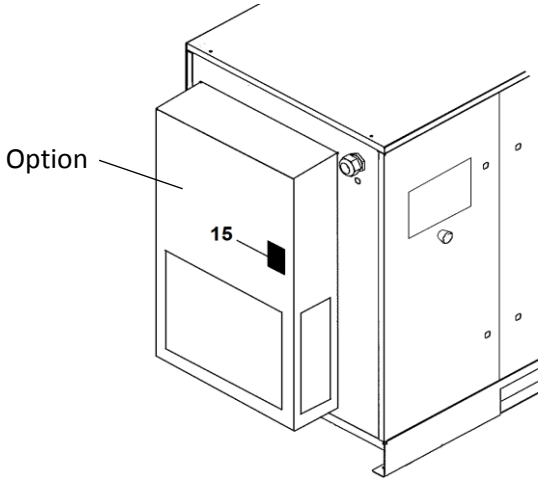
Option
15

TAB. 15 LABELS

Ref	Part Number	Qty	Description	Ref	Part Number	Qty	Description
001	2202 2606 22	1	Protect from weather				
002	2204 1295 02	1	Service label (for Hp35 / kW26)				
	2204 1295 04	1	Service label (for Hp 40-50 / kW30-37)				
003		2	Label voltage				
004		2	Label voltage				
005	1088 1001 02	2	Warning label				
006	2202 9404 00	1	Label (only for VSD)				
007		1	Label				
	2204 1304 01		CPBg 35				
	2204 1304 02		CPBg 40				
	2204 1304 03		CPBg 50				
	2204 1304 04		CPVSd 35				
	2204 1304 05		CPVSd 40				
	2204 1304 06		CPVSd 50				
	2204 1304 07		CPBg 35 D				
	2204 1304 08		CPBg 40 D				
	2204 1304 09		CPBg 50 D				
	2204 1304 10		CPVSd 35 D				
	2204 1304 11		CPVSd 40 D				
	2204 1304 12		CPVSd 50 D				
008	2204 1232 00	1	Label hot surface				
009	2202 2607 91	1	Label automatic restar				
010	1079 9903 48	1	Warning label				
011	2202 2607 91	1	At air outlet				
012	2202 2607 91	1	Warning label				
013	2202 9773 03	1	CP logo				
014	2202 2607 91	1	Label				
015	2202 2513 12	1	Label forklift				
016	2200 6101 09	1	Arrow sticker				
017	2203 0541 10	1	Electric hazard				
018	2202 2611 92	1	Label UL open industr.				

TAB. 16 ENERGY RECOVERY (HP 35 / kW 26)

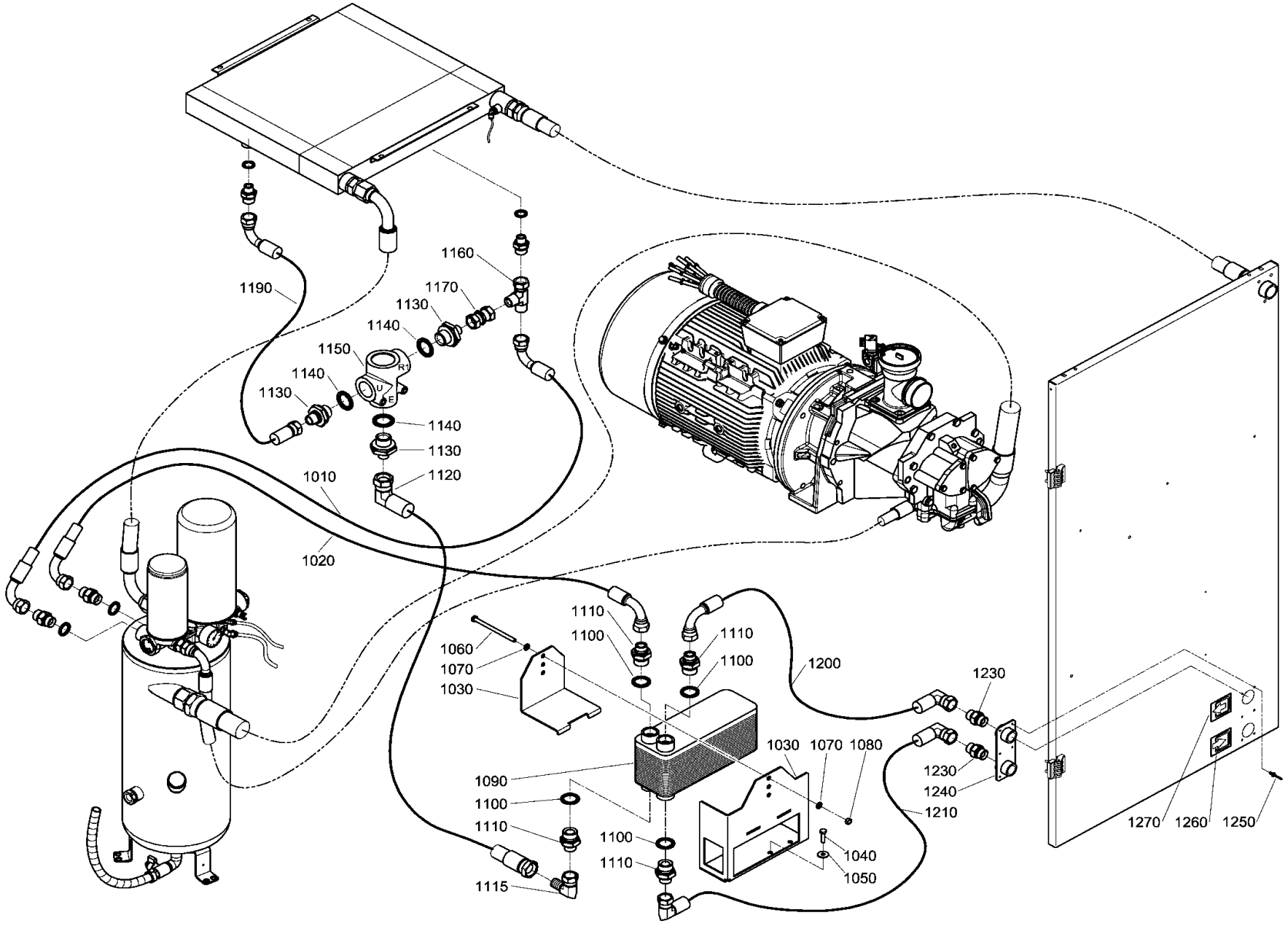

TAB. 16 ENERGY RECOVERY (HP 35 / kW 26)

Ref	Part Number	Qty	Description	Ref	Part Number	Qty	Description
1 010	2202 9325 14	1	Flexible Hose				
1 020	2202 9325 13	1	Flexible Hose				
1 030	2204 1191 00	1	Support Heat Exchanger				
1 040	0147 1326 03	2	Bolt				
1 050	0300 8019 00	2	Washer				
1 060	0147 1344 03	1	Bolt				
1 070	0301 2335 00	2	Washer				
1 080	0291 1110 00	1	Nut Hexagonal				
1 090	1625 7015 00	1	Heat Exchanger				
1 100	0661 1000 44	4	Seal Washer				
1 110	0603 4200 14	4	Nipple Hexagonal				
1 115	0606 0000 28	1	Elbow coupling				
1 120	2204 1184 07	1	Flexible Hose				
1 130	0603 4200 24	3	Nipple Hexagonal				
1 140	0661 1000 45	3	Seal Washer				
1 150	2203 0352 02	1	Thermostatic Valve Energy Rec.				
1 160	2200 7503 28	1	Coupling Tee				
1 170	2202 8884 01	1	Adapter Swivel				
1 190	2202 9863 05	1	Flexible Hose				
1 200	2204 1184 08	1	Flexible Hose				
1 210	2204 1184 09	1	Flexible Hose				
1 230	0571 0035 52	2	Nipple Hexagonal				
1 240	2204 1187 00	1	Flange Water Outlet				
1 250	0129 3270 46	6	Rivet				
1 260	2202 9162 00	1	Label Water Inlet				
1 270	2202 9163 00	1	Label Water Outlet				

TAB. 17 ENERGY RECOVERY (HP 40-50 / kW 30-37)

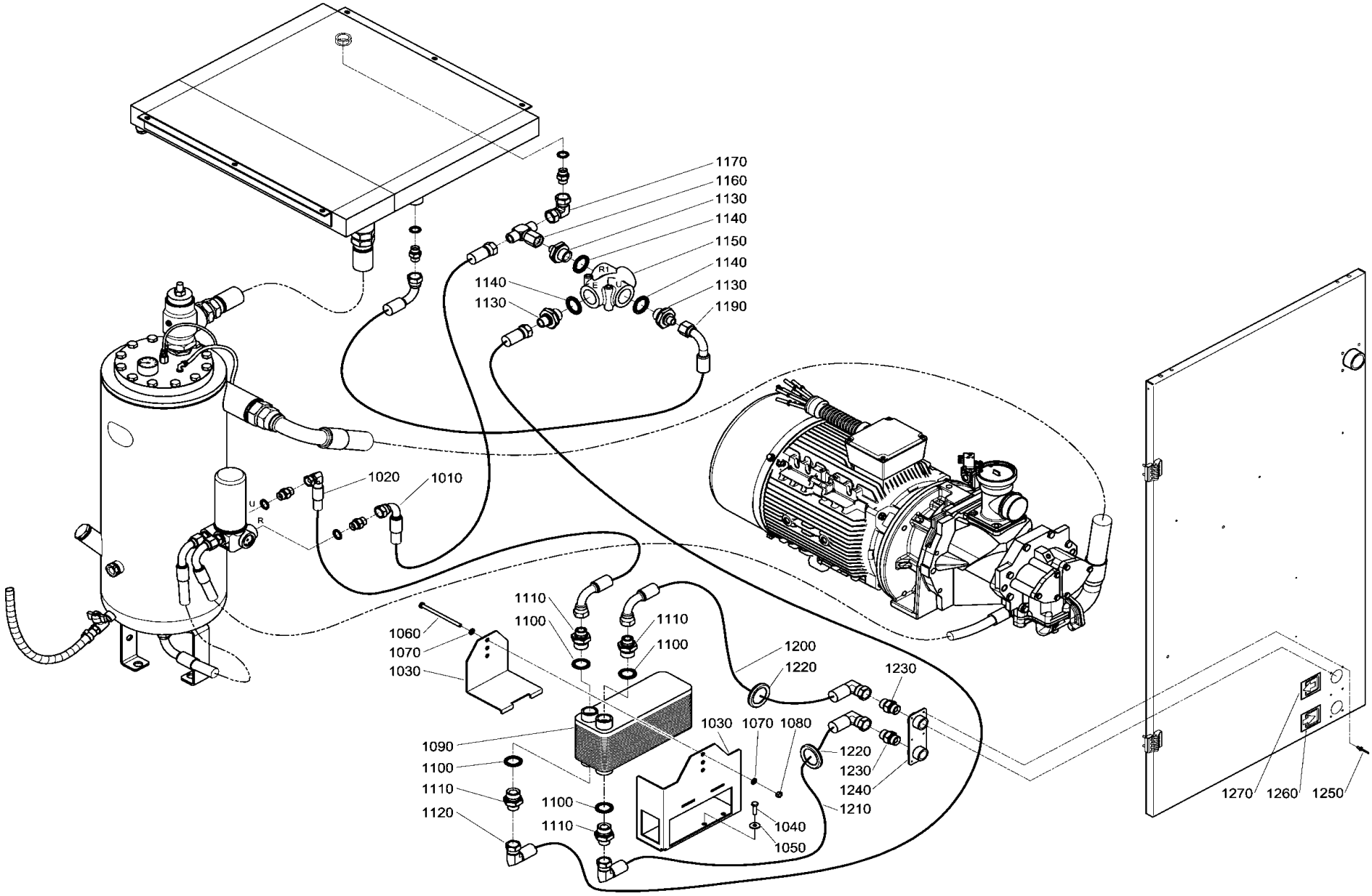

TAB. 17 ENERGY RECOVERY (HP 40-50 / kW 30-37)

Ref	Part Number	Qty	Description	Ref	Part Number	Qty	Description
1 010	2202 8681 10	1	Flexible Hose				
1 020	2204 1184 05	1	Flexible Hose				
1 030	2204 1191 00	1	Support Heat Exchanger				
1 040	0147 1326 03	2	Bolt				
1 050	0300 8019 00	2	Washer				
1 060	0147 1344 03	1	Bolt				
1 070	0301 2335 00	2	Washer				
1 080	0291 1110 00	1	Nut Hexagonal				
1 090	1625 7015 00	1	Heat Exchanger				
1 100	0661 1000 44	4	Seal Washer				
1 110	0603 4200 14	4	Nipple Hexagonal				
1 120	2204 1184 07	1	Flexible Hose				
1 130	0603 4200 24	3	Nipple Hexagonal				
1 140	0661 1000 45	3	Seal Washer				
1 150	2203 0352 02	1	Thermostatic Valve Energy Rec.				
1 160	0606 0000 48	1	Coupling Tee Swivel				
1 170	0606 0000 61	1	Coupling Elbow Swivel				
1 190	2204 1184 06	1	Flexible Hose				
1 200			Flexible Hose				
	2204 1184 08	1	*(Without Dryer)*				
	2202 8681 08	1	*(With Dryer)*				
1 210			Flexible Hose				
	2204 1184 09	1	*(Without Dryer)*				
	2202 8681 08	1	*(With Dryer)*				
1 220			Grommet				
			(Without Dryer)				
	1088 0803 08	2	*(With Dryer)*				
1 230	0571 0035 52	2	Nipple Hexagonal				
1 240	2204 1187 00	1	Flange Water Outlet				
1 250	0129 3270 46	6	Rivet				
1 260	2202 9162 00	1	Label Water Inlet				
1 270	2202 9163 00	1	Label Water Outlet				

TAB. 18 FILTER OPTION (HP 35 / kW 26)

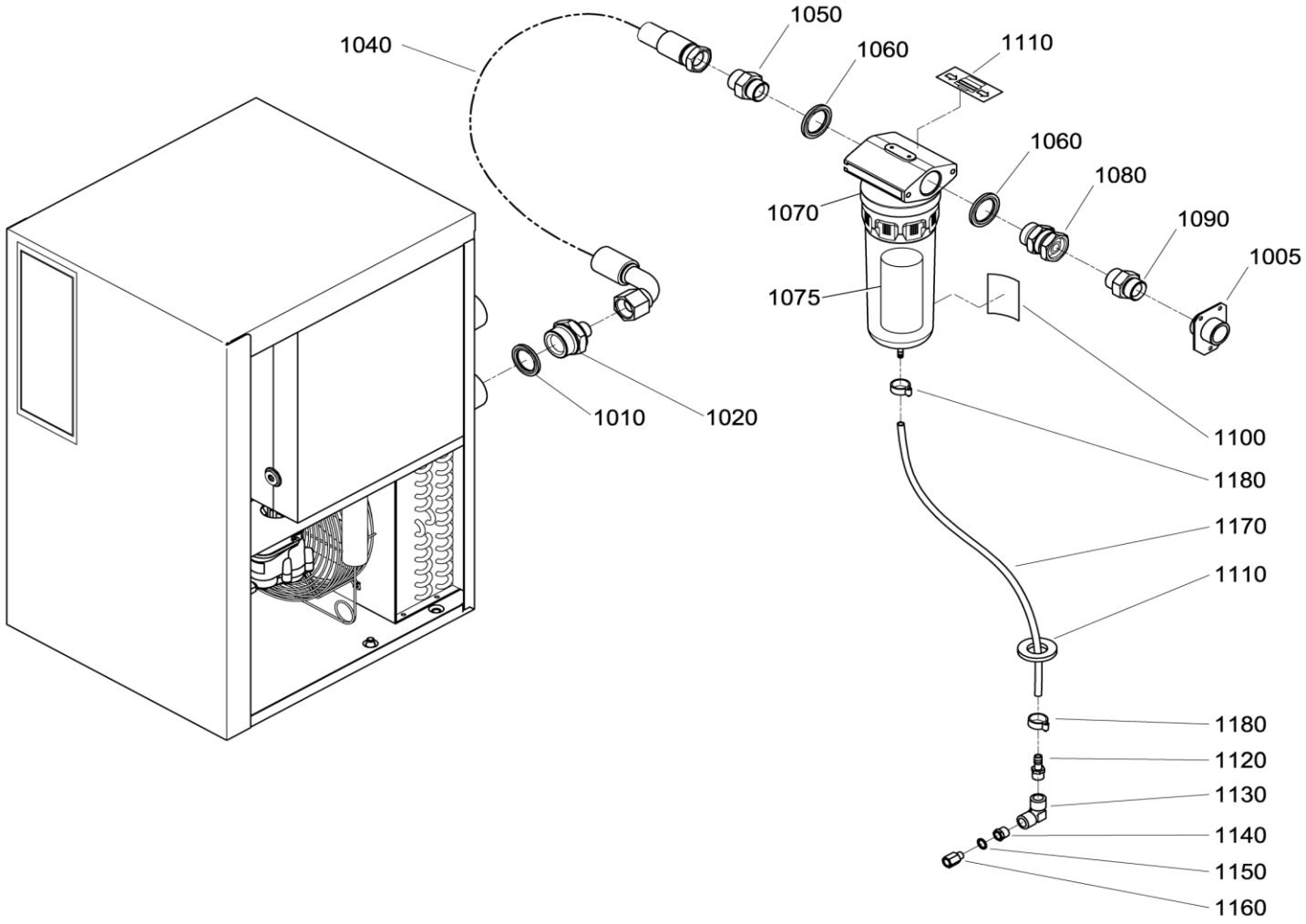

TAB. 18 FILTER OPTION (HP 35 / kW 26)

Ref	Part Number	Qty	Description	Ref	Part Number	Qty	Description
1 005	6275 6131 19	1	Pipe				
1 010	0661 1000 61	1	Seal washer				
1 020	0603 4200 25	1	Nipple				
1 040	2203 0643 02	1	Hose flexible				
1 050	0571 0035 77	1	Nipple				
1 060	0661 1000 44	2	Seal washer				
1 070	8102 8449 02	1	Filter air ass.				
1 075	2258 2901 16	1	Filter element kit				
1 080	0606 0000 05	1	Adapter swivel				
1 090	0606 0000 27	1	Nipple				
1 100	2204 1305 01	1	Decal				
1 110	0989 4220 08	1	Grommet				
1 120	6221 9973 00	1	Coupling rubber hose				
1 130	0560 4400 82	1	Elbow				
1 140	6231 9269 00	1	Reduction				
1 150	6211 6690 00	1	Gasket				
1 160	6221 9610 00	1	Coupling				
1 170	0070 6002 49	X	Plastic tube (in meters)				
1 180	0347 6100 52	2	Clamp				

TAB. 19 FILTER OPTION (HP 40-50 / kW 30-37)

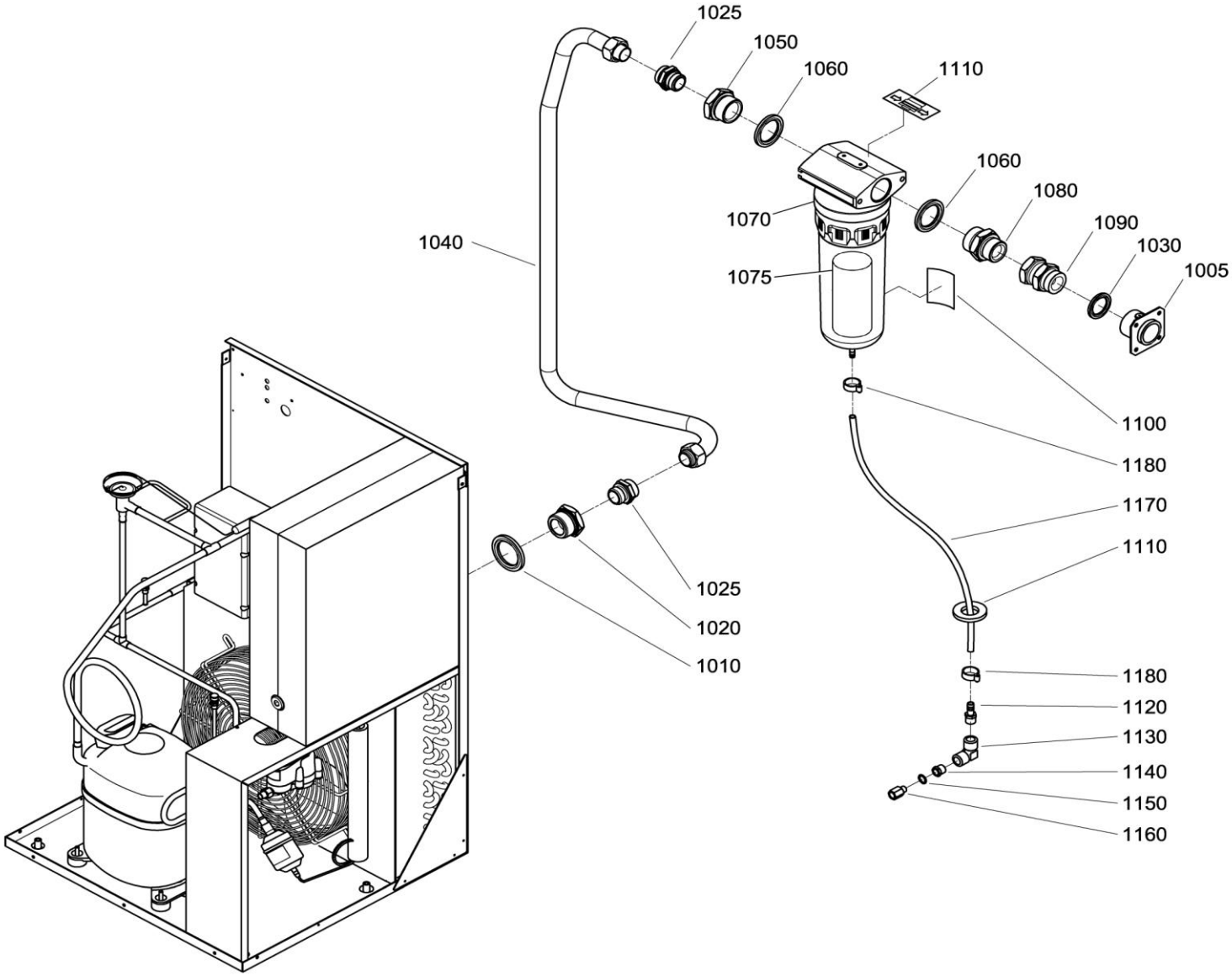

TAB. 19 FILTER OPTION (HP 40-50 / kW 30-37)

Ref	Part Number	Qty	Description	Ref	Part Number	Qty	Description
1 005	2204 1178 00	1	Air outlet				
1 010	0661 1000 61	1	Seal washer				
1 020	0605 8700 70	1	Bushing reducer				
1 025	0580 0017 37	2	Fitting				
1 030	0661 1000 45	1	Seal washer				
1 040	2204 1247 00	1	Pipe				
1 050	0605 8700 70	1	Bushing reducer				
1 060	0661 1000 61	2	Seal washer				
1 070	8102 8449 10	1	Filter air ass.				
1 075	2258 2901 17	1	Filter element kit				
1 080	0603 4200 30	1	Nipple				
1 090	0606 0000 81	1	Adapter swivel				
1 100	2204 1305 02	1	Decal				
1 110	0989 4220 08	1	Grommet				
1 120	6221 9973 00	1	Coupling rubber hose				
1 130	0560 4400 82	1	Elbow				
1 140	6231 9269 00	1	Reduction				
1 150	6211 6690 00	1	Joint				
1 160	6221 9610 00	1	Coupling				
1 170	0070 6002 49	X	Plastic tube (in meters)				
1 180	0347 6100 52	2	Clamp				

TAB. 20 HEAVY DUTY INLET FILTER (HP 35 / kW 26)

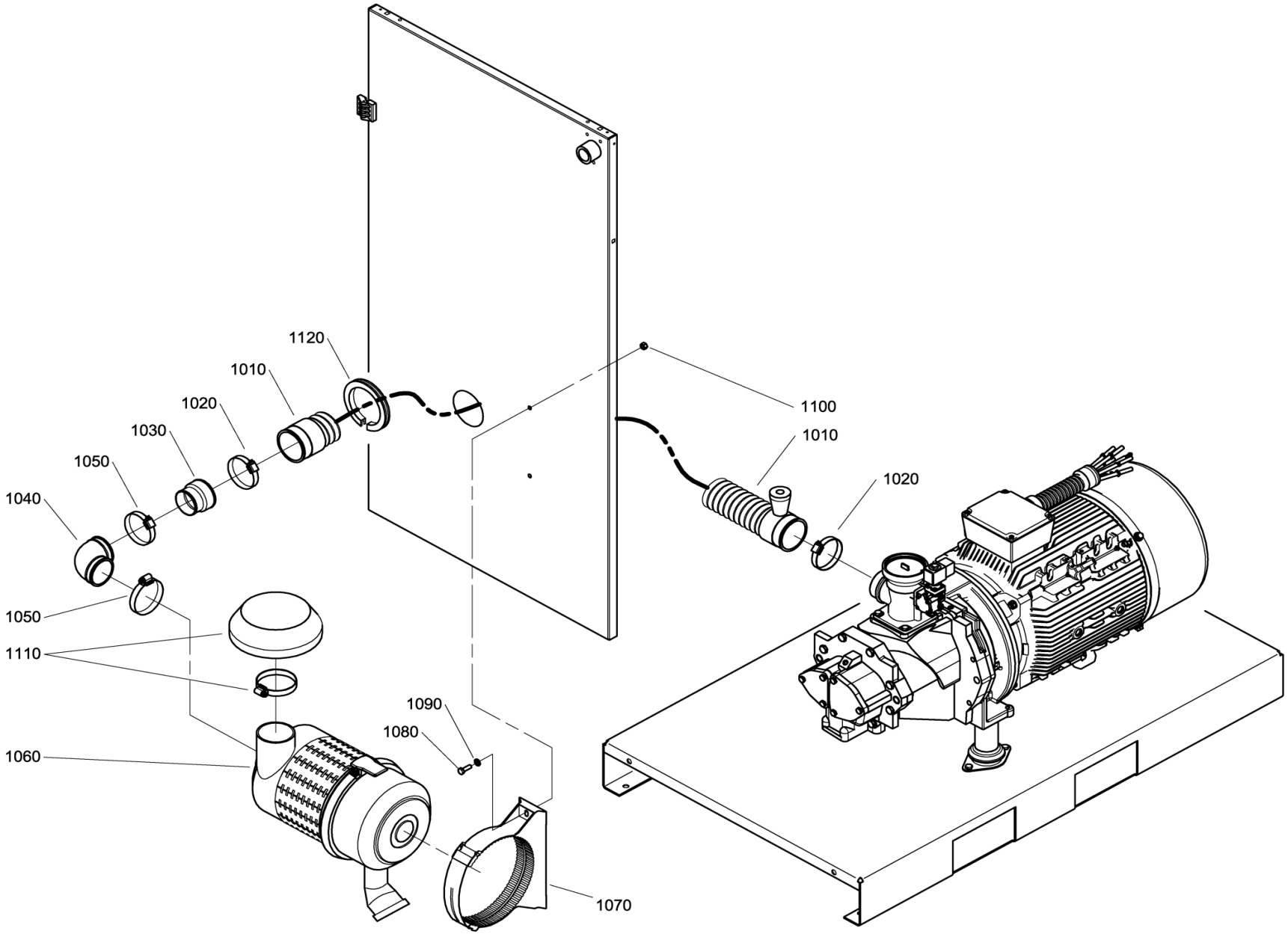

TAB. 20 HEAVY DUTY INLET FILTER (HP 35 / kW 26)

Ref	Part Number	Qty	Description	Ref	Part Number	Qty	Description
1 010	1622 1788 81	1	Hose assembly				
1 020	0347 6100 16	2	Hose clamp				
1 030	1622 0173 00	1	Adapter				
1 040	1622 0174 00	1	Elbow				
1 050	0347 6113 00	2	Hose clamp				
1 060	2202 9202 00	1	Filter air heavy duty				
1 070	1615 6958 00	1	Support filter				
1 080	0147 1328 03	2	Bolt				
1 090	0301 2335 00	2	Washer				
1 100	0291 1185 30	2	Nut				
1 110	2235 6450 00	1	Rain protection cap				
1 120	1619 2758 00	X	Seal gasket				

TAB. 21 WATER SEPARATOR WITHOUT DRYER (HP 30-35 / 22-26 kW)

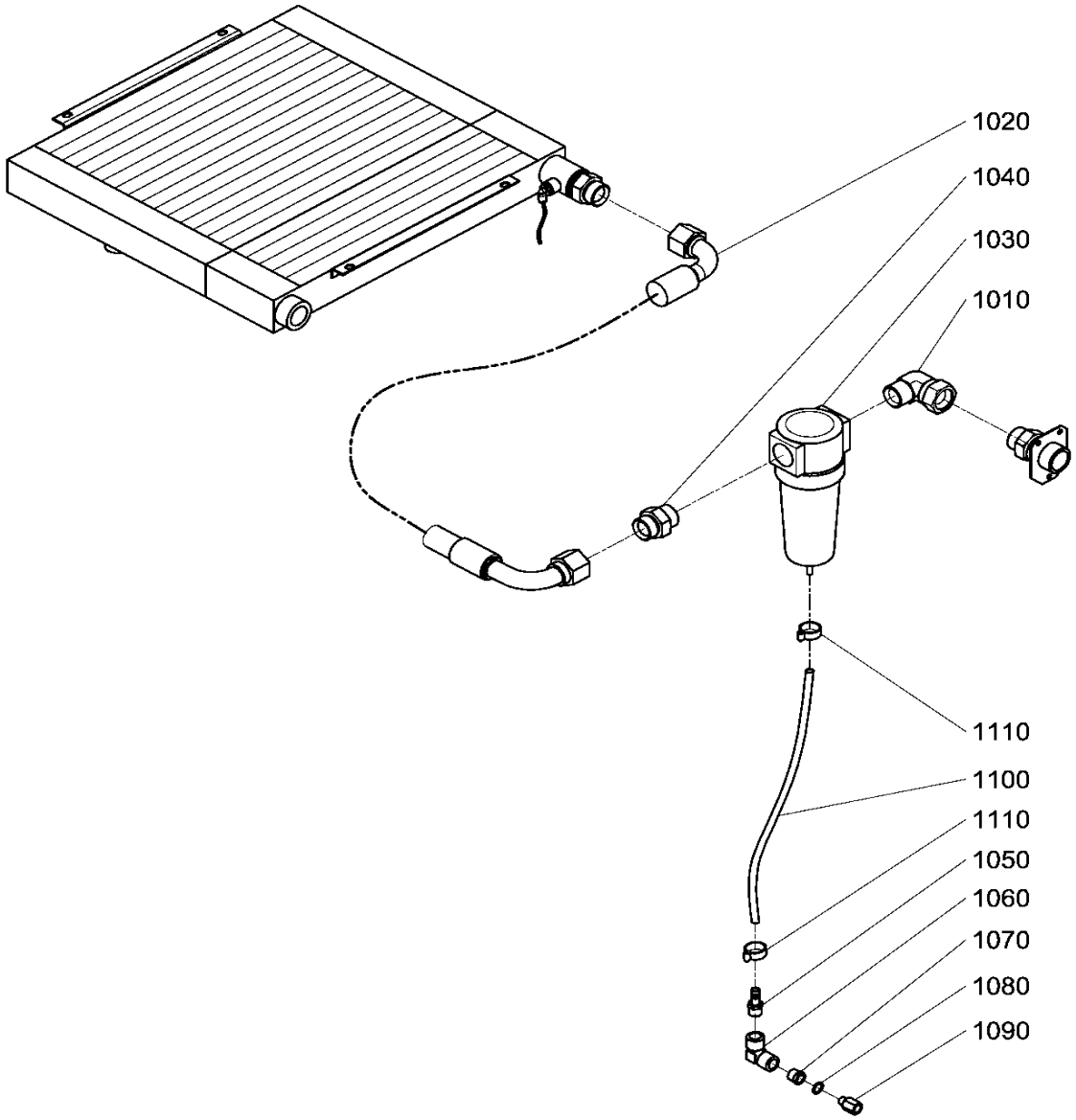

TAB. 21 WATER SEPARATOR WITHOUT DRYER (HP 30-35 / 22-26 kW)

Ref	Part Number	Qty	Description	Ref	Part Number	Qty	Description
1 010	2202 9631 01	1	Elbow swivel				
1 020	2203 0643 07	1	Hose flexible				
1 030	2204 1252 04	1	Water separator drain				
1 040	0560 1307 03	1	Nipple				
1 050	6221 9973 00	1	Coupling rubber hose				
1 060	0560 4400 82	1	Elbow				
1 070	6231 9269 00	1	Reduction				
1 080	6211 6690 00	1	Joint				
1 090	6221 9610 00	1	Coupling				
1 100	0070 6002 49	X	Plastic tube (in meters)				
1 110	0347 6100 52	2	Clamp				

TAB. 22 WATER SEPARATOR WITH DRYER (HP 35 / 26 kW)

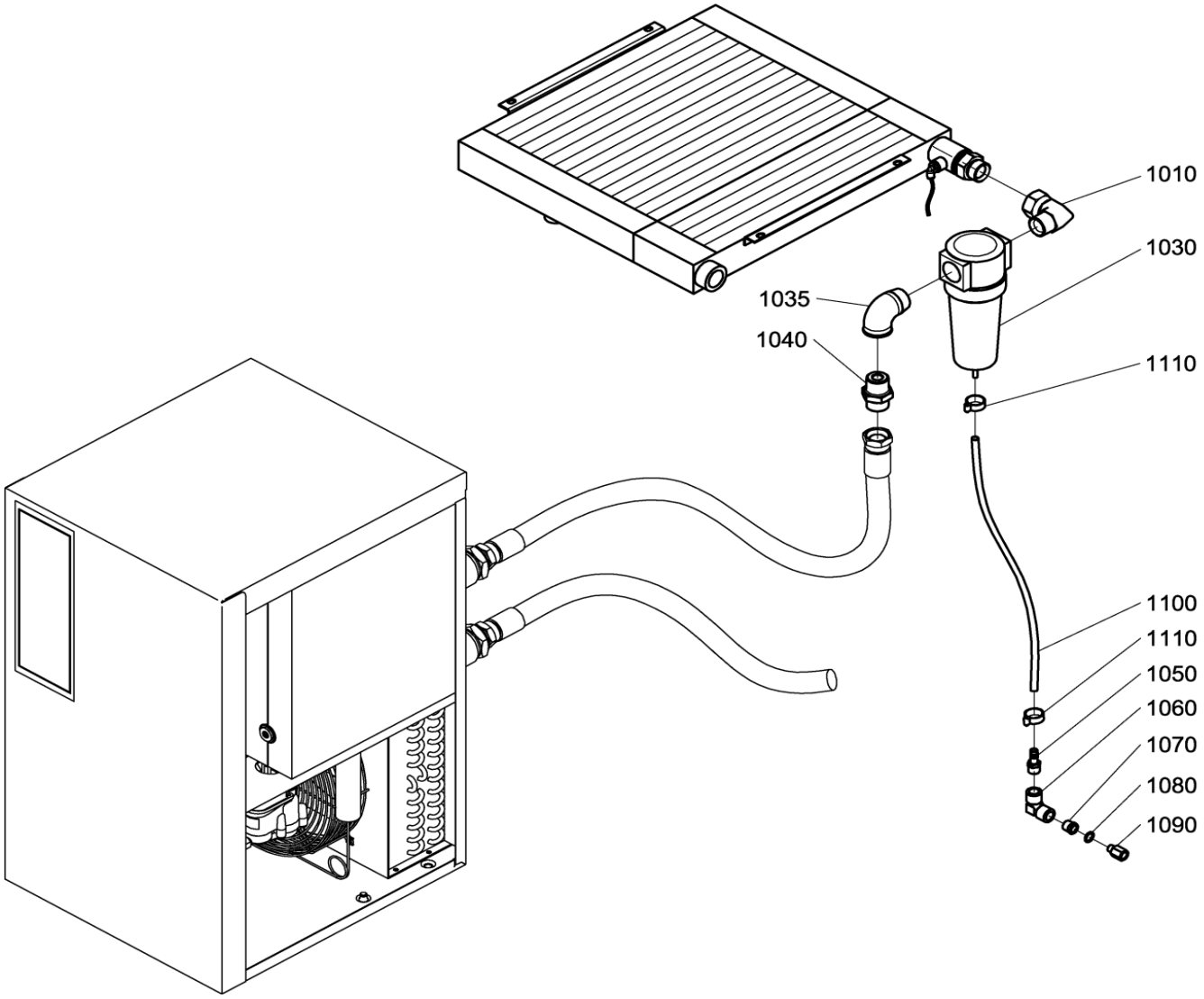

TAB. 22 WATER SEPARATOR WITH DRYER (HP 35 / 26 kW)

Ref	Part Number	Qty	Description	Ref	Part Number	Qty	Description
1 010	2202 9631 01	1	Elbow swivel				
1 030	2204 1252 04	1	Water separator drain				
1 035	0560 1307 03	2	Elbow				
1 040	0606 0000 27	1	Nipple				
1 050	6221 9973 00	1	Coupling rubber hose				
1 060	0560 4400 82	1	Elbow				
1 070	6231 9269 00	1	Reduction				
1 080	6211 6690 00	1	Joint				
1 090	6221 9610 00	1	Coupling				
1 100	0070 6002 49	X	Plastic tube (in meters)				
1 110	0347 6100 52	2	Clamp				

TAB. 23 WATER SEPARATOR (HP 40-50 / 30-37 kW)

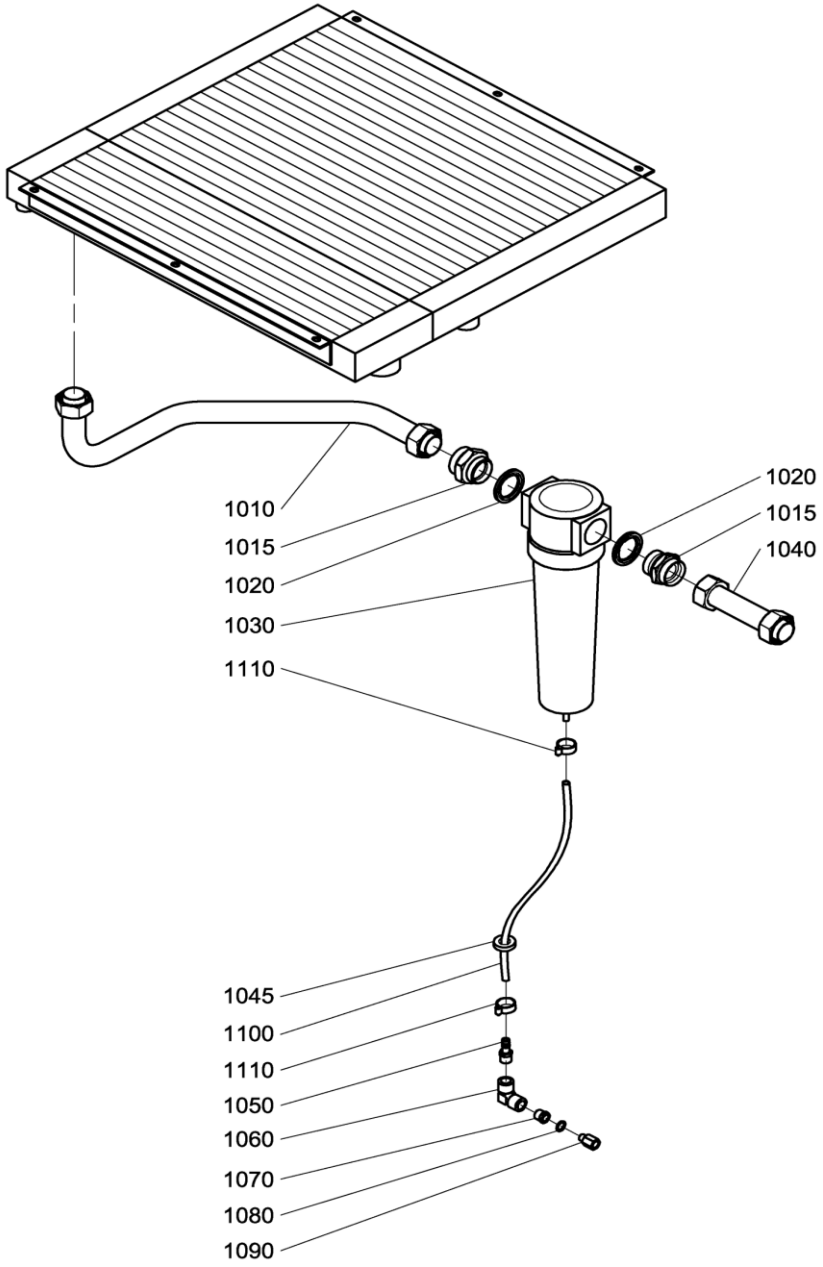

TAB. 23 WATER SEPARATOR (HP 40-50 / 30-37 kW)

Ref	Part Number	Qty	Description	Ref	Part Number	Qty	Description
1 010	2204 1196 00	1	Pipe				
1 015	2204 1160 00	2	Pipe coupling				
1 020	0661 1000 61	2	Seal washer				
1 030	2204 1252 05	1	Water separator drain				
1 040	2204 1195 00	1	Pipe				
1 045	0989 4220 08	1	Grommet				
1 050	6221 9973 00	1	Coupling rubber hose				
1 060	0560 4400 82	1	Elbow				
1 070	6231 9269 00	1	Reduction				
1 080	6211 6690 00	1	Joint				
1 090	6221 9610 00	1	Coupling				
1 100	0070 6002 49	X	Plastic tube (in meters)				
1 110	0347 6100 52	2	Clamp				

TAB. 24 AUTOMATIC CONDENSATE DRAIN (HP 35-40-50 / 26-30-37 kW)

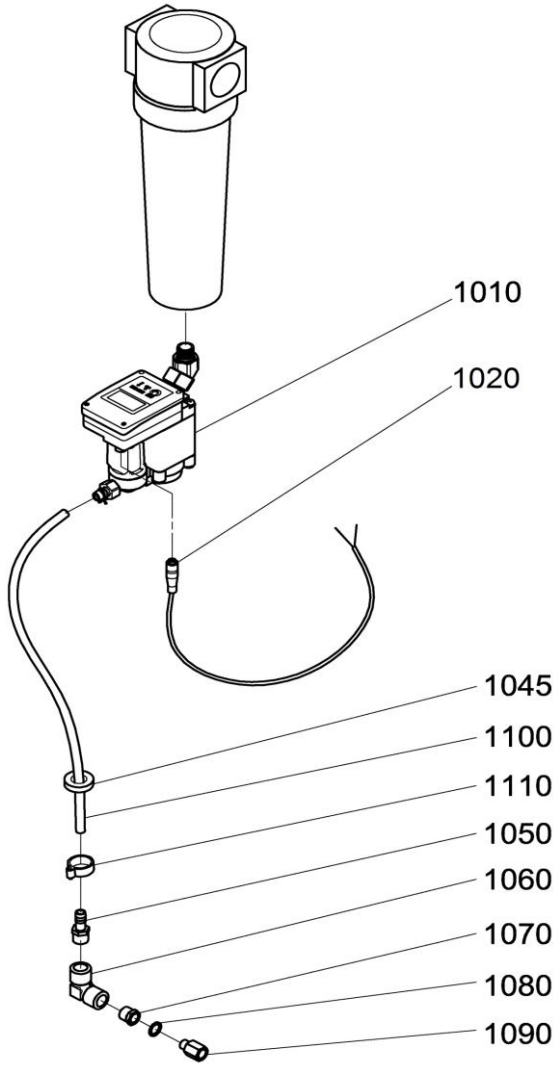

TAB. 24 AUTOMATIC CONDENSATE DRAIN (HP 35-40-50 / 26-30-37 kW)

Ref	Part Number	Qty	Description	Ref	Part Number	Qty	Description
1 010	2202 8159 05	1	Electronic frain				
1 020		1	Wire harness				
	2205 0119 11		IEC				
	2205 0301 91		UL				
1 045	0989 4220 08	1	Grommet				
1 050	6221 9973 00	1	Queue cannelee				
1 060	0560 4400 82	1	Elbow				
1 070	6231 9269 00	1	Reduction				
1 080	6211 6690 00	1	Joint				
1 090	6221 9610 00	1	Raccord				
1 100	0070 6002 49	X	Plastic tube (in meters)				
1 110	0347 6100 52	1	Clamp				
	2200 9020 17	1	Kit wear drain				

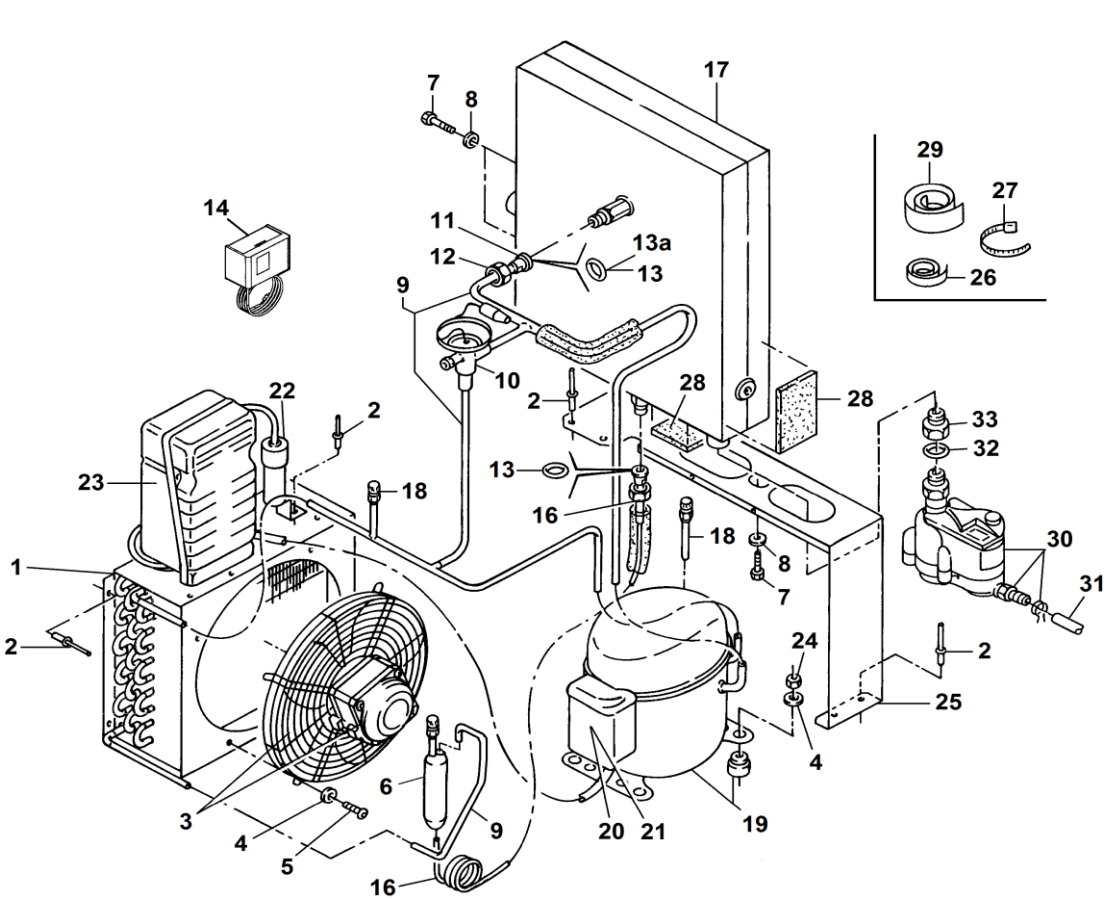
7
8
17
29
27
26
14
11
12
13a
13
9
10
2
28
28
33
32
22
2
23
18
13
16
18
30
31
1
8
7
2
24
2
25
4
6
9
3
4
5
16
20
21
19

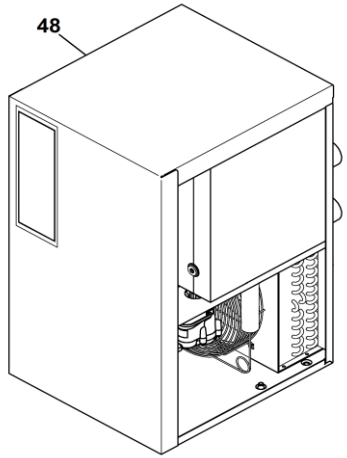
48

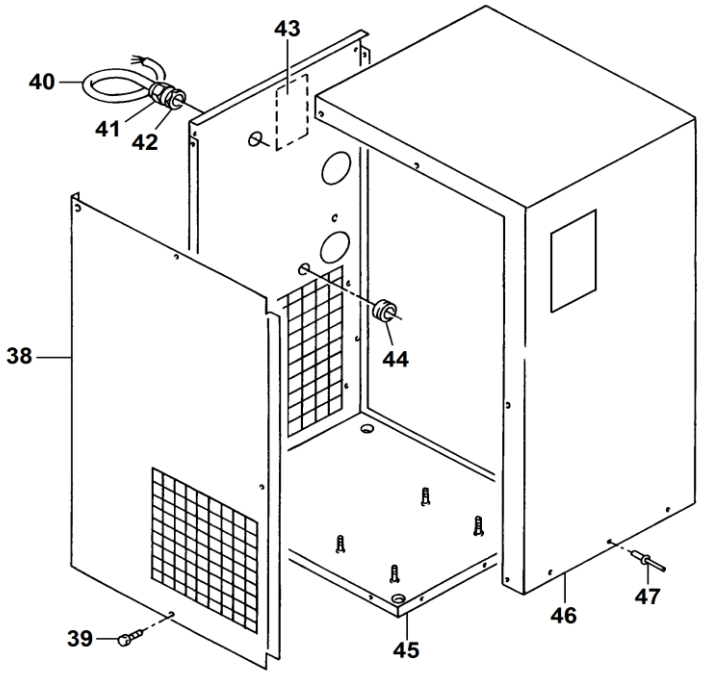
43
40
41
42
38
44
39
45
46
47

TAB. 25 AIR DRYER (A8+) HP 35 / kW26

Ref	Part Number	Qty	Description	Ref	Part Number	Qty	Description
1	2202 7352 01	1	CONDENSER COIL	47	0129 3270 40	10	BLIND RIVET
2	0129 3270 40	11	BLIND RIVET	48	2200 9027 99	1	ASS. DRYER (230/60 Hz)
3	1624 2917 85	1	FAN MOTOR (230/60 Hz)		2200 9020 17	1	KIT WEAR DRAIN
4	0300 0274 64	8	WASHER				
5	0215 0003 91	4	SCREW				
6	1617 2996 01	1	FILTER-DRYER				
7	0147 1362 03	3	SCREW				
8	0300 0274 17	3	WASHER				
9	2202 909 680	1	ASS. PIPE				
10	2202 7324 01	1	BY-PASS VALVE				
11	2202 7466 05	1	SLEEVE				
12	2202 7466 04	1	ROTALOCK NUT				
13	2202 7425 01	1	O-RING				
13a	2200 6336 10	1	O-RING				
14	1089 9139 23	1	PRESSURE SWITCH				
16	2202 7413 05	1	CAPILLARY TUBE				
17	2202 7367 82	1	EXCHANGER				
18	2200 5997 43	2	CHECK VALVE				
19	2202 7061 04	1	COMPRESSOR (230/60 Hz)				
20	2202 7651 15	1	START RELAY (for compressor 2202 7061 04)				
21	2202 7652 18	1	OVERLOAD PROTECTOR (for compressor 2202 7061 04)				
22	2202 7652 03	1	RUN CAPACITOR (for compressor 2202 7061 04)				
23	2202 7650 14	1	START CAPACITOR (for compressor 2202 7061 04)				
24	0266 2108 00	4	NUT				
25	2202 7333 00	1	STIRRUP				
26	0017 9862 67	X	TAPE (IN METERS)				
27	0348 0101 20	10	CABLE TIE				
28	0395 1010 05	X	INSULATION SET				
29	2202 7587 01	X	TAPE (IN METERS)				
30	2202 7547 03	1	CONDENSATE DRAIN				
31	0070 6002 49	X	PIPE (IN METERS)				
32	0663 9096 00	1	O-RING				
33	2202 7703 01	1	COUPLING				
34	1624 9350 02	1	CAPACITOR (for compressor 2202 7061 04)				
38	2202 7835 02	1	PANEL				
39	2200 7199 53	10	SCREW				
40	9828 4429 11	1	CUBICLE				
41	0698 5141 21	1	CABLE GLAND				
42	0697 9809 53	1	NUT				
43	1079 9903 48	1	LABEL				
44	0989 4220 08	1	GROMMET				
45	2202 7378 82	1	FRAME				
46	2202 7379 86	1	FRONT PANEL				

TAB. 26 AIR DRYER (A10) HP 40-50 / kW30-37

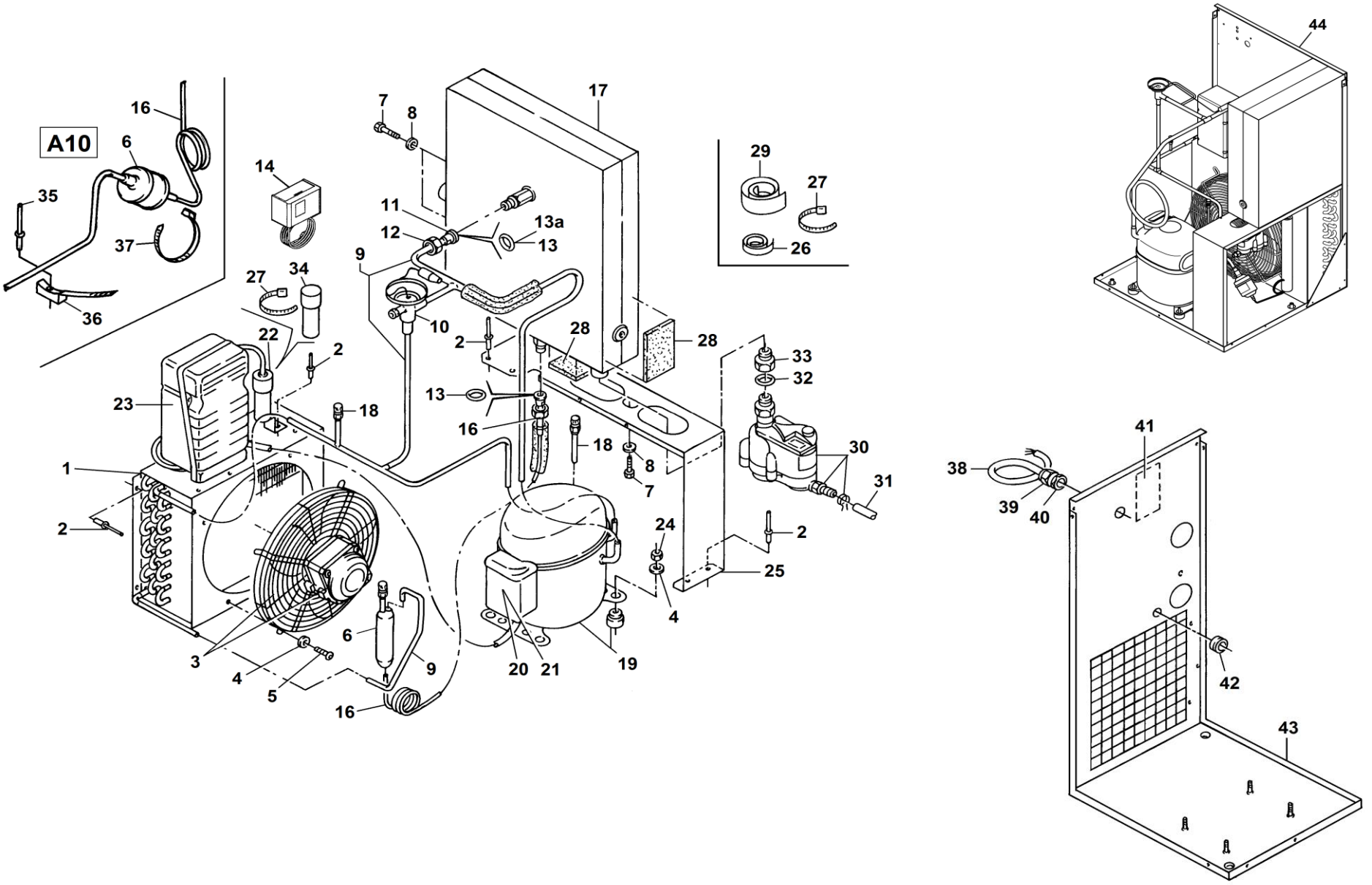

TAB. 26 AIR DRYER (A10) HP 40-50 / kW30-37

Ref	Part Number	Qty	Description	Ref	Part Number	Qty	Description
1	2202 7372 01	1	CONDENSER COIL	44	2200 9027 83		ASS. DRYER (230/60 Hz)
2	0129 3270 40	11	BLIND RIVET		2200 9020 17	1	KIT WEAR DRAIN
3	2202 7108 02	1	FAN MOTOR (230/60 Hz)				
4	0300 0274 64	8	WASHER				
5	0215 0003 91	4	SCREW				
6	2202 7898 01	1	FILTER-DRYER				
7	0147 1362 03	3	SCREW				
8	0300 0274 17	3	WASHER				
9	2202 7355 80	1	ASS. PIPE				
10	2202 7324 03	1	BY-PASS VALVE				
11	2202 7466 06	1	SLEEVE				
12	2202 7466 07	1	ROTALOCK NUT				
13	2202 7425 01	1	O-RING				
13a	2200 6336 11	1	O-RING				
14	1089 9139 23	1	PRESSURE SWITCH				
16	2202 7413 07	1	CAPILLARY TUBE				
17	2202 7368 82	1	EXCHANGER				
18	2200 5997 43	2	CHECK VALVE				
19	2202 7061 01	1	COMPRESSOR (230/60 Hz)				
20	2202 7651 15	1	START RELAY (for compressor 2202 7061 01)				
21	2202 7652 16	1	OVERLOAD PROTECTOR (for compressor 2202 7061 01)				
22	2202 7653 03	1	RUN CAPACITOR (for compressor 2202 7061 01)				
23	2202 7650 05	1	START CAPACITOR (for compressor 2202 7061 01)				
24	0266 2108 00	4	NUT				
25	2202 7384 00	1	STIRRUP				
26	0017 9862 67	X	TAPE (IN METERS)				
27	0348 0101 20	10	CABLE TIE				
28	0395 1010 05	X	INSULATION SET				
29	2202 7587 01	X	TAPE (IN METERS)				
30	2202 7547 03	1	CONDENSATE DRAIN				
31	0070 6002 49	X	PIPE (IN METERS)				
32	0663 9096 00	1	O-RING				
33	2202 7703 01	1	COUPLING				
34	2202 7929 01	1	CAPACITOR (for compressor 2202 7061 01)				
35	0129 3270 40	1	BLIND RIVET				
36	0348 0110 03	1	ANCHOR PLATE				
37	0348 0101 13	1	CABLE TIE				
38	9828 4435 51	1	CUBICLE (230/60 Hz)				
39	0698 5141 21	1	CABLE GLAND				
40	0697 9809 53	1	NUT				
41	1079 9903 48	1	LABEL				
42	0989 4220 08	1	GROMMET				
43	2202 7386 82	1	FRAME				

TAB. 27 MAIN POWER ISOLATOR SWITCH (for 220-230V FIX SPEED VERSION)

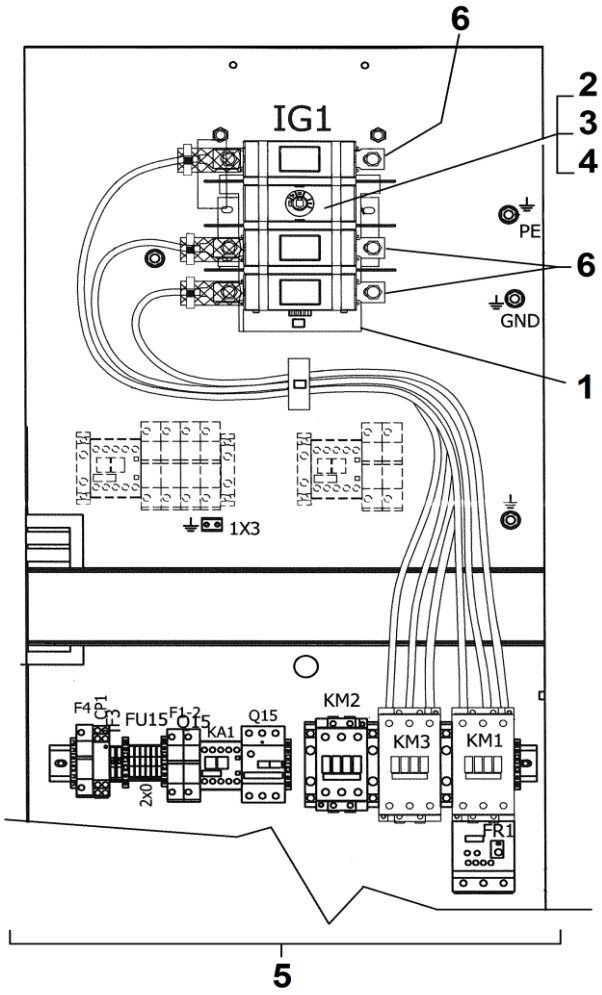

TAB. 27 MAIN POWER ISOLATOR SWITCH (for 220-230V FIX SPEED VERSION)

Ref	Part Number	Qty	Description	Ref	Part Number	Qty	Description
1	2204 1326 00	1	PLATE SUPPORT				
2	1089 9498 98	1	POWER SWITCH				
3	1089 9498 99	1	HANDLE				
4	1089 9498 17	1	SHAFT				
5	2205 0301 51	1	ELECTRICAL CUBICLE FOR OPTION POWER SWITCH				
			(220-460V/60Hz for HP35)				
5	2205 0301 52	1	ELECTRICAL CUBICLE FOR OPTION POWER SWITCH				
			(220-460V/60Hz for HP40)				
5	2205 0301 53	1	ELECTRICAL CUBICLE FOR OPTION POWER SWITCH				
			(220-460V/60Hz for HP50)				
6	1089 9513 60	3	PROTECTIVE COVER				

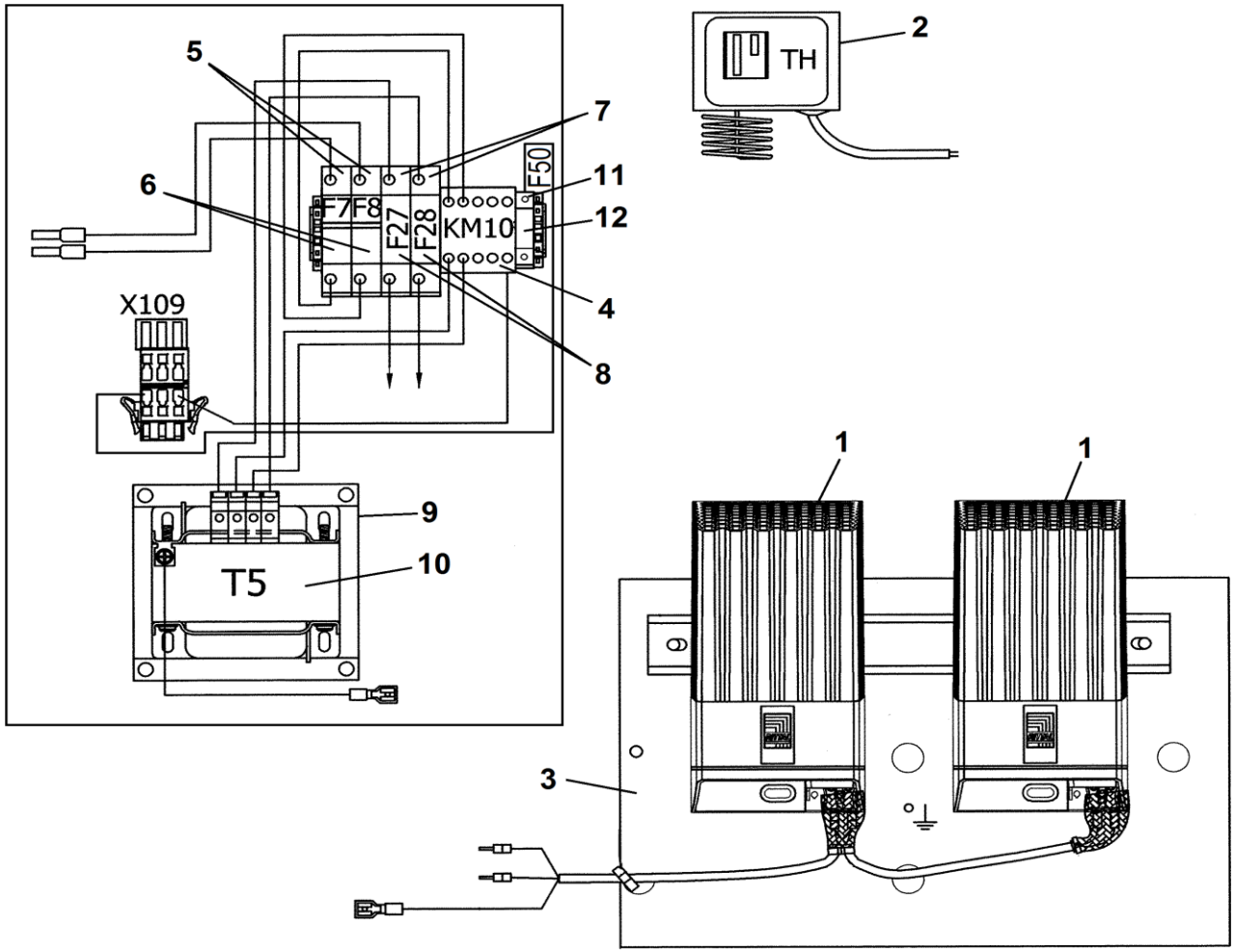

Canopy heater 230-460V (Fix speed) 2205030441

TAB. 28 CANOPY HEATHER (230-460V) FIX SPEED

Ref	Part Number	Qty	Description	Ref	Part Number	Qty	Description
1	1089 0504 10	2	HEATER RESISTANCE				
2	6226 3924 00	1	THERMOSTAT				
3	2204 1364 00	1	STIRRUP FOR HEATER				
4	1089 9602 18	1	CONTACTOR				
5	1089 9594 04	1	FUSE HOLDER				
6	1089 9168 35	2	FUSE (for 230V)				
6	1089 9168 87	2	FUSE (for 460V)				
7	1089 9594 04	1	FUSE HOLDER				
8	1089 9168 34	2	FUSE				
9	2202 9153 00	1	STIRRUP FOR TRANSFORMER				
10	2204 1613 01	1	AUTOTRANSFORMER				
11	1089 0506 16	1	FUSE HOLDER				
12	1089 9468 79	2	FUSE				

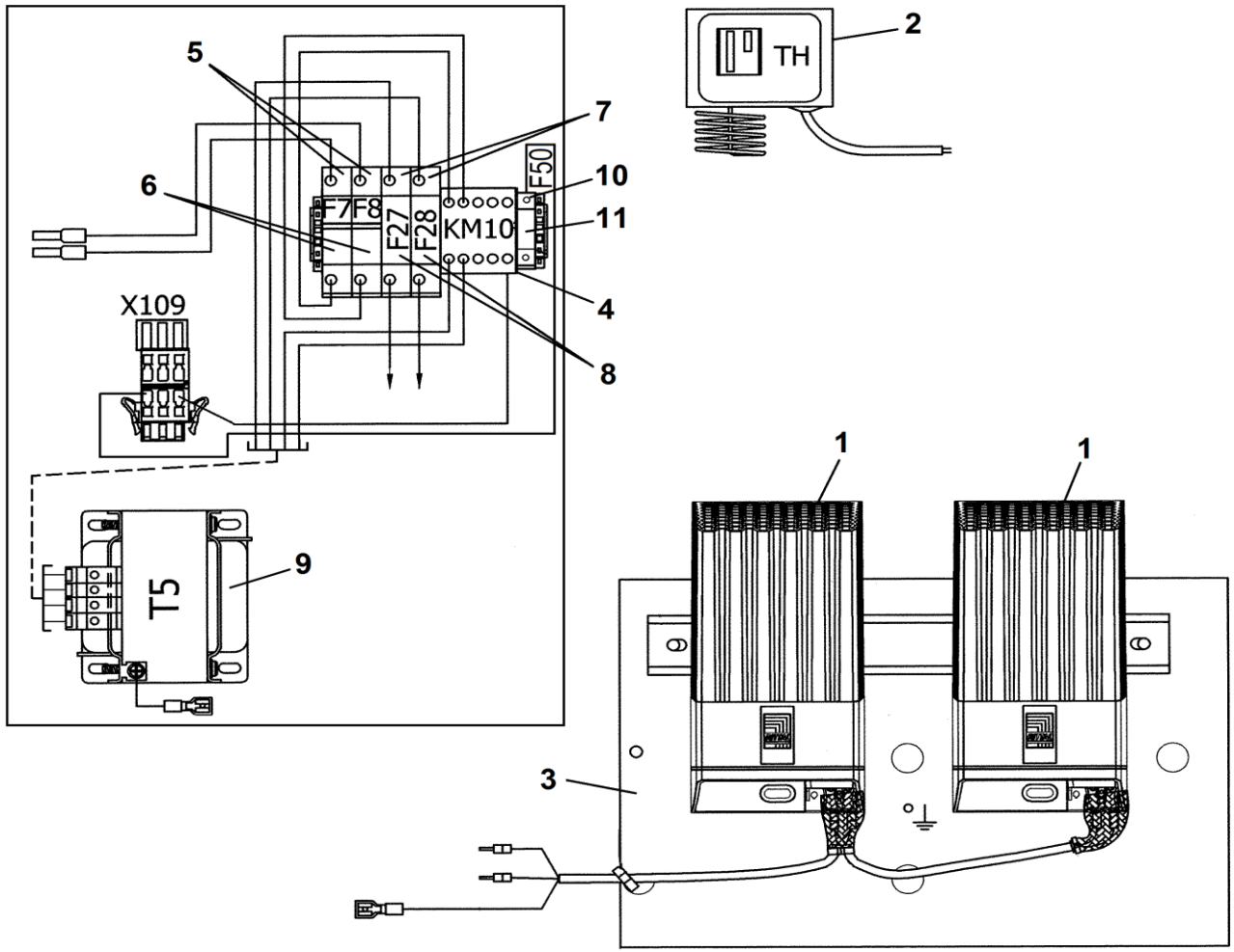

Canopy heater 460V (VSD) 2205030443

TAB. 29 CANOPY HEAT (460V) VSD

Ref	Part Number	Qty	Description	Ref	Part Number	Qty	Description
1	1089 0504 10	2	HEATER RESISTANCE				
2	6226 3924 00	1	THERMOSTAT				
3	2204 1364 00	1	STIRRUP FOR HEATER				
4	1089 9602 18	1	CONTACTOR				
5	1089 9594 02	1	FUSE HOLDER				
6	1089 0612 24	2	FUSE				
7	1089 9594 02	1	FUSE HOLDER				
8	1089 0612 24	2	FUSE				
9	2202 9153 00	1	STIRRUP FOR TRANSFORMER				
10	1089 9594 02	1	FUSE HOLDER				
11	1089 0612 24	2	FUSE				

TAB. 30 SERVICE KITS

KIT DI MANUTENZIONE / SERVICE KIT / KIT DE MAINTENANCE / WARTUNGSAUFBAUSATZ / KIT DE MANTENIMIENTO

Description	*Type*	*Reference*	*Contains*	*Frequency*
KIT 2000h	Hp35 / kW26	**2901 3550 00**	Air Filter elem., Oil filter, Drain filter mesh	2000h Or annually
KIT 2000h	Hp40-50 / kW30-37	**2901 3551 00**	Air Filter, Oil filter, Drain filter mesh	2000h Or annually
KIT 4000h	Hp35 / kW26	**2901 3556 00**	Air Filter elem., Oil filter, Separator oil, Filter, Drain filter mesh	4000h Or annually
KIT 4000h (for VSD)	Hp35 / kW26	**2901 3558 00**	Air Filter elem., Oil filter, Separator oil, Filter, Drain filter mesh, Grease (VSD only), Filter suct. Air	4000h Or annually
KIT 4000h	Hp40-50 / kW30-37	**2901 3559 00**	Air Filter elem., Oil filter, Element oil separator, Gasket, Filter, Drain filter mesh	4000h Or annually
KIT 4000h (for VSD)	Hp40-50 / kW30-37	**2901 3560 00**	Air Filter elem., Oil filter, Element oil separator, Gasket, Filter, Drain filter mesh, Grease (VSD only), Filter suct. Air	4000h Or annually
KIT 8000h	Hp35 / kW26	**2901 3565 00**	Air Filter elem., Oil filter, Separator oil, Filter, Kit unloader, Kit non return valve, Kit minimun pressure valve, Kit thermostatic valve	8000h Orevery 3 years
KIT 8000h (for VSD)	Hp35 / kW26	**2901 3566 00**	Air Filter elem., Oil filter, Separator oil, Filter, Grease (VSD only), Filter suct. Air, Kit unloader, Kit non return valve, Kit minimun pressure valve, Kit thermostatic valve	8000h Orevery 3 years
KIT 8000h	Hp40-50 / kW30-37	**2901 3567 00**	Air Filter elem., Oil filter, Element oil separator, Gasket, Filter, Kit unloader, Kit non return valve, Kit thermostatic valve	8000h Orevery 3 years
KIT 8000h (for VSD)	Hp40-50 / kW30-37	**2901 3568 00**	Air Filter elem., Oil filter, Element oil separator, Gasket, Filter, Grease (VSD only), Filter suct. Air, Kit unloader, Kit non return valve, Kit thermostatic valve	8000h Orevery 3 years
KIT WEAR DRAIN		**2200 9020 17**	Kit wear LD200-202-203	2000h Or annually
OVERHAUL KIT (for VSD)		**2901 1959 00**	C80 Element I-03 / I-05	24000h
OVERHAUL KIT (for Fixed speed)		**2901 3586 00**	C80 Element I-01	24000h

TAB. 30 SERVICE KITS

TAB. 30 SERVICE KITS

KIT DI MANUTENZIONE / SERVICE KIT / KIT DE MAINTENANCE / WARTUNGSAUFBAUSATZ / KIT DE MANTENIMIENTO

Description	*Type*	*Reference*		
Bearing kit	HP35 / kW26 (Fixed speed) 60Hz	**2200 9032 20**		
Bearing kit	HP40 / kW30 (Fixed speed) 60Hz	**2200 9032 21**		
Bearing kit	HP50 / kW37 (Fixed speed) 60Hz	**2200 9032 21**		
Bearing kit	HP35-40-50 / kW26-30-37 (VSD)	**2200 9032 23**		

Tab. huile / *Tab. oil* / Tab. aceite / *Tabella olio* / Abb. Öl	
Rotair 2000	
5 L	**6215 7140 00**
20 L	**6215 7141 00**
209 L	**6215 7142 00**

Rotair FOOD GRADE	
5 L	**1630 0821 00**
20 L	**1630 0605 00**

Rotair Xtra (Option 8000 Hrs Oil)	
5 L	**6215 7148 00**
20 L	**6215 7149 00**
209 L	**6215 7150 00**

Chicago Pneumatic™