SaE 8

334204 - Gold
334205 - Blue
334206 - Red
334207 - Green
334208 - Brown
334209 - Purple

Pack of + & -

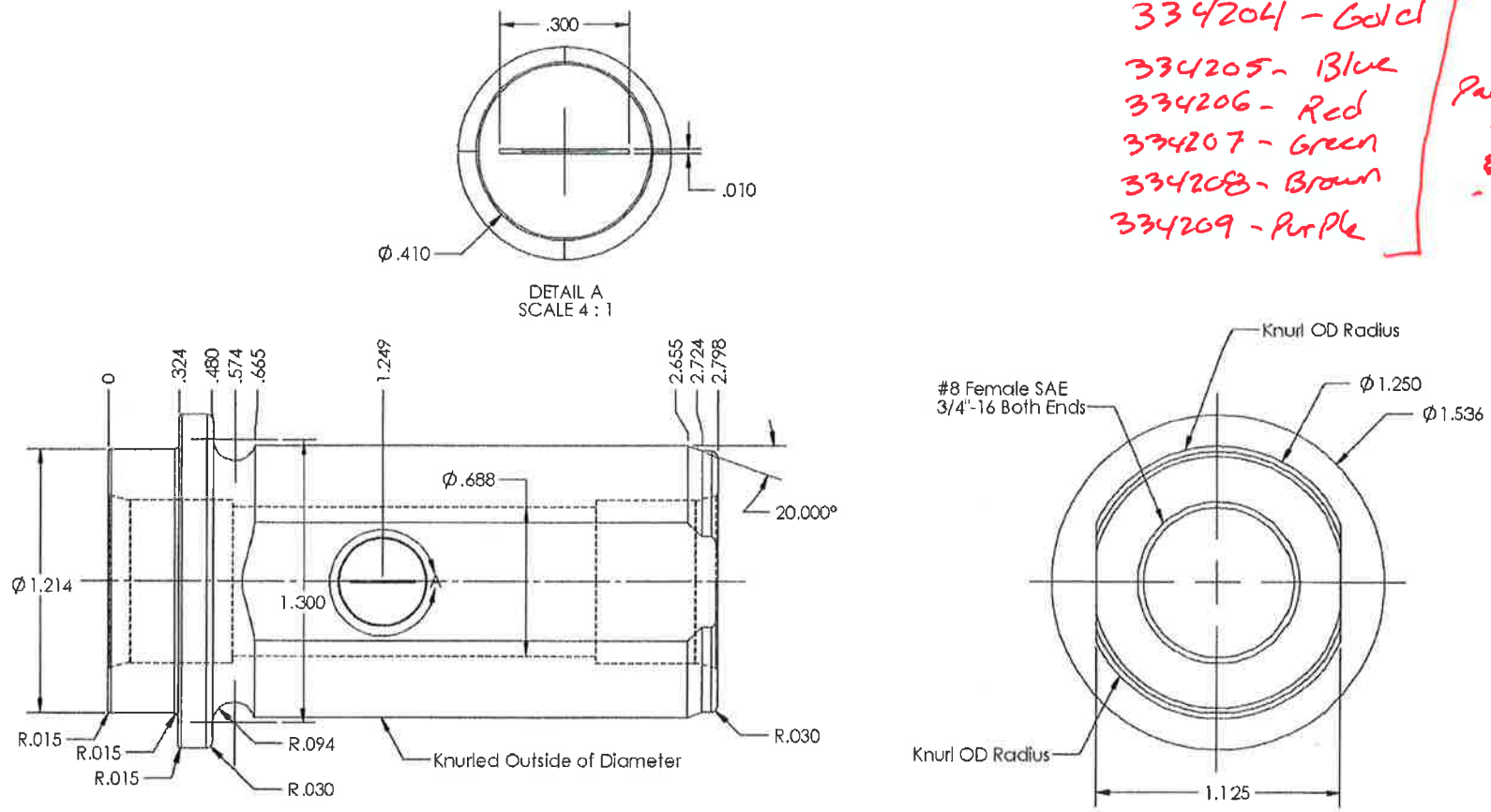

THIRD ANGLE PROJECTION

DAKOTA FLUID POWER
COMMITTED TO CUSTOMER SUCCESS
HYDRAULIC & PNEUMATIC SYSTEMS, SALES & SERVICE
(605)336-9982 (800)727-24240 FAX (605)332-0988
3409 N. LEWIS AVENUE, SIOUX FALLS, SD 57104
www.dakotafluidpower.com
DO NOT SCALE DRAWING

UNLESS OTHERWISE SPECIFIED:

PROPRIETARY AND CONFIDENTIAL
THE INFORMATION CONTAINED IN THIS DRAWING IS THE SOLE PROPERTY OF DAKOTA FLUID POWER. ANY REPRODUCTION IN PART OR AS A WHOLE WITHOUT THE WRITTEN PERMISSION OF DAKOTA FLUID POWER IS PROHIBITED.

TITLE: DFP QD Adapter

DRAWN: DAVID GUNNINI DATE: 12/22/2017

SIZE	DWG. NO.	REV
B	DFP QD Adapter	

SCALE: 1:0.5 WEIGHT: SHEET 1 OF 2